INTERNATIONAL RECOMMENDATION

OIML R 139-1

Edition 2018 (E)

Reconfirmed in 2022

Compressed gaseous fuel measuring systems for vehicles.

Part 1: Metrological and technical requirements

Ensembles de mesurage de gaz compressé pour véhicules.

Partie 1: Exigences métrologiques et techniques

ORGANISATION INTERNATIONALE DE MÉTROLOGIE LÉGALE

INTERNATIONAL ORGANIZATION OF LEGAL METROLOGY

Contents

Foreword 5

Part 1: Metrological and technical requirements 7

1 Introduction 7
2 Scope 7
3 Terminology 8

3.1 Metrological characteristics 8
3.2 Measuring system and its constituents 10
3.3 Self-service measuring systems 13
3.4 Tests and test conditions 14
3.5 Abbreviations and symbols used 15

4 Description of the measuring system and its constituents 16

4.1 Constituents of the measuring system 16
4.2 Constituents of the meter 16

5 Metrological requirements for the measuring system 18

5.1 Presentation of the measurement result 18
5.2 Maximum permissible error (MPE) 18
5.3 Measuring range 19
5.4 Repeatability 20
5.5 Specifications of ambient conditions and rated operating conditions 20
5.6 Significant fault 22
5.7 Disturbances 22
5.8 Durability 24

6 Technical requirements for the measuring system 25

6.1 Construction 25
6.2 Presentation of measured value 25
6.3 Storing of measurement results (memory device; hardware) 27
6.4 Data transmission 28
6.5 Zero-setting device 28
6.6 Presetting device 28
6.7 Calculator 29
6.8 Emergency power supply device 29
6.9 Protection against fraud 29
6.10 Checking facilities 30
6.11 Software 32
6.12 Technical requirements for measuring systems with self-service arrangement 33
6.13 Battery-powered instruments 35
6.14 Installation of the measuring system 35

7 Markings 36
8 Instruction manual 37
9 Sealing 38

9.1 General 38
9.2 Electronic sealing devices 38

10 Stamping plate 39
11 Suitability for testing 39
12 Presumption of compliance 39
13 Specific requirements for ancillary devices 39
14 Transfer point 40

15 Additional requirements for specific modules 40

15.1 Meter 40

15.2 Additional technical requirements for external printers and external memory devices 41

Annex A Requirements for software controlled compressed gaseous fuel measuring systems for vehicles .. 43

Annex B Typical methods for correction of the depressurization quantity for hydrogen CGF measuring systems 47

Annex C Bibliography 49

Foreword

The International Organization of Legal Metrology (OIML) is a worldwide, intergovernmental organization whose primary aim is to harmonize the regulations and metrological controls applied by the national metrological services, or related organizations, of its Member States.

The main categories of OIML publications are:

- **International Recommendations (OIML R),** which are model regulations that establish the metrological characteristics required of certain measuring instruments and which specify methods and equipment for checking their conformity. OIML Member States shall implement these Recommendations to the greatest possible extent;
- **International Documents (OIML D),** which are informative in nature and which are intended to harmonize and improve work in the field of legal metrology;
- **International Guides (OIML G),** which are also informative in nature and which are intended to give guidelines for the application of certain requirements to legal metrology; and
- **International Basic Publications (OIML B),** which define the operating rules of the various OIML structures and systems.

OIML Draft Recommendations, Documents and Guides are developed by Project Groups linked to Technical Committees or Subcommittees which comprise representatives from the Member States. Certain international and regional institutions also participate on a consultation basis. Cooperative agreements have been established between the OIML and certain institutions, such as ISO and the IEC, with the objective of avoiding contradictory requirements. Consequently, manufacturers and users of measuring instruments, test laboratories, etc. may simultaneously apply OIML publications and those of other institutions.

International Recommendations, Documents, Guides and Basic Publications are published in English (E) and translated into French (F) and are subject to periodic revision.

Additionally, the OIML publishes or participates in the publication of **Vocabularies (OIML V)** and periodically commissions legal metrology experts to write **Expert Reports (OIML E)**. Expert Reports are intended to provide information and advice, and are written solely from the viewpoint of their author, without the involvement of a Technical Committee or Subcommittee, nor that of the CIML. Thus, they do not necessarily represent the views of the OIML.

This publication – OIML R 139-1, Edition 2018 (E) – was developed by Project Group p 7 of OIML Technical Subcommittee TC 8/SC 7 *Gas metering*. It was approved by the International Committee of Legal Metrology (CIML) at its 53rd CIML Meeting in October 2018 and sanctioned by the International Conference on Legal Metrology in 2020. This Recommendation was reconfirmed by the CIML at its 57th meeting in October 2022.

OIML Publications may be downloaded from the OIML website in the form of PDF files. Additional information on OIML Publications may be obtained from the Organization's headquarters:

Bureau International de Métrologie Légale
11, rue Turgot - 75009 Paris – France
Telephone: 33 (0)1 48 78 12 82
Fax: 33 (0)1 42 82 17 27
E-mail: biml@oiml.org
Internet: www.oiml.org

Part 1: Metrological and technical requirements

1 Introduction

This OIML Recommendation consists of three parts:

- Part 1: Metrological and technical requirements;
- Part 2: Metrological controls and performance tests;
- Part 3: Report format for type evaluation.

Publication of all three parts is necessary for OIML R 139 to be applicable in the OIML Certification System.

Part 1 of this OIML Recommendation specifies the metrological and technical requirements applicable to compressed gaseous fuel measuring systems for vehicles.

Part 2 provides guidelines for the type evaluation of the measuring systems and of their constituent elements (modules such as the meter, etc.), as well as for the initial and subsequent verification.

2 Scope

The measuring systems that are covered by this Recommendation are intended for the fueling of road vehicles, rail engines, boats, vessels, and aircrafts with compressed natural gas (CNG), compressed gaseous hydrogen, biogas, gas blends or other compressed gaseous fuels.

Measuring systems for liquid petroleum gas are not included in the scope of this Recommendation. These are within the scope of OIML R 117, which covers fluids in a liquid state.

This Recommendation applies to all measuring systems fitted with a meter as defined in 3.2.2 (continuous integrating measurements), whatever the measuring principle may be of the meters or their application.

This Recommendation is not intended to hinder innovations in technology. According to the state of the art, this Recommendation is intended for measuring systems providing mass indications.

Note: Except for hydrogen CGF measuring systems, the metrological requirements concerning the measurement of gases within the scope of this Recommendation are independent of the type of gas being measured. The testing methods for type evaluation or further verification of compliance as described in Part 2 may differ where necessary between all the different gasses.

3 Terminology

Unless otherwise stated in the following subclauses, the terminology used in this Recommendation conforms to OIML V 1:2013 [1], to OIML V 2-200:2012 [2] and to OIML D 11:2013 [3].

In addition, for the purposes of this Recommendation, the following definitions apply.

3.1 Metrological characteristics

3.1.1
indication

quantity value provided by a measuring instrument or a measuring system
[OIML V 2-200:2012, 4.1; OIML V 1:2013, 0.03]

3.1.2
scale interval

value expressed in units of the measured quantity of the difference between

- the values corresponding to two consecutive scale marks, for analog indication, or
- two consecutive indicated values, for digital indication

[OIML V 1:2013, 5.01]

3.1.3
primary indication

indication (displayed, printed or memorized) which is subject to legal metrology control

Note: Indications other than primary indications are commonly referred to as secondary indications.

3.1.4
error of indication

indication minus a reference quantity value
[OIML V 2-200:2012, 4.1] [OIML V 1:2013, 0.04]

3.1.5
maximum permissible error

extreme value of measurement error, with respect to a known reference quantity value, permitted by specifications or regulations for a given measurement, measuring instrument, or measuring system
[OIML V 2-200:2012, 4.26] [OIML V 1:2013, 0.05]

3.1.6
rated operating condition

operating condition that must be fulfilled during measurement in order that a measuring instrument or measuring system perform as designed
[OIML V 2-200:2012, 4.9] [OIML V 1:2013, 0.08]

3.1.7
reference condition

operating condition prescribed for evaluating the performance of a measuring instrument or measuring system or for comparison of measurement results
[OIML V 2-200:2012, 4.11] [OIML V 1:2013, 0.09]

3.1.8
repeatability error

difference between the largest and the smallest results of the several successive measurements of the same quantity carried out under the same *repeatability condition*[1]

3.1.9
intrinsic error

error of indication determined under reference conditions

[OIML V 1:2013, 0.06]

3.1.10
fault

difference between the error of indication and the intrinsic error of a measuring instrument

[OIML V 1:2013, 5.12]

3.1.11
fault limit

value specified in this Recommendation delimiting non-significant faults

[OIML V 1:2013, 5.13]

3.1.12
significant fault

fault exceeding the applicable fault limit value

[OIML V 1:2013, 5.14]

3.1.13
durability

ability of the measuring instrument to maintain its performance characteristics over a period of use

[OIML V 1:2013, 5.15]

3.1.14
durability error

difference between the intrinsic error after a period of use and the *initial intrinsic error* [OIML V 1:2013, 5.11] of a measuring instrument

[OIML V 1:2013, 5.16]

3.1.15
significant durability error

durability error exceeding the value specified in this Recommendation

[OIML V 1:2013, 5.17]

[1] OIML V 2-200:2012

3.1.16
minimum measured quantity of a measuring system
minimum delivery

minimum totalized mass in one batch of gas required to fulfill the metrological criteria of the specific measuring system

Note: Measuring systems should not be used for measuring quantities less than the MMQ.

3.1.17
minimum specified mass deviation

absolute value of the maximum permissible error for the minimum measured quantity of a measuring system

3.2 Measuring system and its constituents

3.2.1
device

distinctive part of a measuring instrument or measuring system performing a specific task

Note 1: A device can either be a physical part or concern a function (for instance in the software).

Note 2: A "facility" can also be regarded as a device in accordance with this definition (see also note 4.2.4).

3.2.2
meter

instrument intended to measure continuously and display the total value of the quantity of gas passing the sensor at metering conditions

Note: A meter includes at least a measuring device, a calculator (including adjustment or correction devices if present) and an indicating device (see Figure 1).

3.2.3
measuring device

part of the meter converting the flow, the volume or the mass of the measurand into signals representing the measured quantity required as input for the measurement calculator, comprising a sensor and a transducer.

3.2.3.1
measurand quantity sensor
sensor

part of the measuring device, directly affected by a measurand quantity parameter producing an input signal for the transducer

3.2.3.2
measurement transducer
transducer

device that provides an output quantity having a specified relation to the input quantity

[OIML V 2-200:2012, 3.7] [OIML V 1:2013, 0.11]

Note: For the purpose of this Recommendation this transducer is part of the measuring device and its output signal represents the output quantity which is based on the input from the sensor(s), being the input quantity.

3.2.4
calculator

association of metering calculator and operational calculator

Note: The metering calculator and the operational calculator may be two separate elements or they may form a single unit. Only where there is a particular need to dissociate the two kinds of calculators is the association of both functions called the calculator in this Recommendation.

3.2.4.1
metering calculator

part of the meter that receives the output signals from the transducer(s) and, possibly, from associated measuring instruments, transforms them and, if appropriate, stores the results in memory until they are used

3.2.4.2
operational calculator

optional part of the meter that receives the digital output signals from the metering calculator and, possibly, from associated measuring instruments, which processes them into data for the indicating device

3.2.5
indicating device

part of the measuring instrument (meter) which displays the measurement results, either continuously or on demand

[OIML V 1:2013, 5.04]

Note: A printing device is not an indicating device, although a printed measurement result is considered to be an indication.

3.2.6
ancillary device

device intended to perform a particular function, directly involved in elaborating, transmitting or displaying measurement results

[OIML V 1:2013, 5.06]

Note 1: An ancillary device may or may not be subject to legal metrology control according to its function in the measuring system or to national regulations.

Note 2: Main ancillary devices are:

a) zero-setting device;
b) repeating indicating device;
c) printing device;
d) memory device;
e) price indicating device;
f) totalizing indicating device;
g) presetting device;
h) self-service device.

3.2.7
additional device

part or a device, other than an ancillary device, required to ensure correct measurement or intended to facilitate the measuring operations, or which could in any way affect the measurement

Note: Main additional devices are:

a) filter;
b) device used for the transfer point;
c) anti-swirl device;
d) branches or bypasses;
e) valves, hoses, and in general, all the gaseous piping.

3.2.8
compressed gaseous fuel measuring systems for vehicles

measuring system intended for the refueling of motor vehicles with compressed gaseous fuel

Note: Hereafter such a system is referred to as a "measuring system".

3.2.9
presetting device

device which permits the selection of the quantity value to be measured and which automatically stops the flow of the gas at the end of the measurement of the selected quantity

Note: The preset quantity value may be the mass or the related price to pay.

3.2.10
adjustment device

device incorporated in the meter, that only allows shifting of the error curve generally parallel to itself, with a view to bringing errors within the maximum permissible errors

3.2.11
associated measuring instrument

instrument for the measurement of a quantity, other than the measurand, the value of which is used to correct or convert a measurement result

[OIML V 1:2013, 5.09]

Note: Within the scope of this Recommendation, this concerns the instrument which is connected to the calculator or the correction device, for measuring certain quantity values which are characteristic of the gas, with a view to making a correction.

3.2.12
correction device

device connected to or incorporated in the meter for automatically correcting the mass, by taking into account the flow rate and/or the characteristics of the gas to be measured (viscosity, temperature, pressure, etc.) and the pre-established calibration curves

3.2.13
transfer point

point (physical location) in the measuring system downstream of the meter after which the gas is defined as being delivered

3.2.14
checking facility

facility, incorporated in a measuring instrument (or system), which enables significant faults to be detected and acted upon, including

- incorrect functioning of a specific device of the measuring instrument or system, and/or
- disturbed communication between specific devices of the measuring instrument or system

Note: "Acted upon" refers to any adequate response by the measuring instrument (for example a luminous signal, an acoustic signal, interruption or blocking of the measurement process, etc.).

[OIML V 1:2013, 5.07]

3.2.15
automatic checking facility

checking facility operating without the intervention of an operator

[OIML D 11:2013, 3.19.1]

3.2.15.1
permanent automatic checking facility
checking facility of type P

automatic checking facility that operates at each measurement cycle

[OIML D 11:2013, 3.19.1.1]

3.2.15.2
intermittent automatic checking facility
checking facility of type I

automatic checking facility that operates at certain time intervals or per fixed number of measurement cycles

[OIML D 11:2013, 3.19.1.2]

3.2.16
non-automatic checking facility
checking facility of type N

checking facility, requiring the intervention of an operator

[OIML D 11:2013, 3.19.2]

3.3 Self-service measuring systems

3.3.1
self-service arrangement

arrangement that allows the purchaser of the gas to personally utilize a measuring system for the purpose of obtaining gas

3.3.2
self-service device

specific device that is part of a self-service arrangement and which allows one or more measuring systems to perform in this self-service arrangement

Note 1: The self-service device includes all the elements and constituents that are mandatory so that a measuring system performs in a self-service arrangement.

Note 2: The arrangement is made of a self-service device and connected measuring systems.

3.3.3
attended service mode

operating mode of a self-service arrangement in which the supplier is present and controls the authorization for the delivery

Note 1: In attended service mode, the settlement of the transaction takes place before the customer leaves the site of the delivery.

Note 2: A transaction is settled when the parties interested in the transaction have made their agreement known (explicitly or implicitly) as regards the amount of the transaction. This may be a payment, signing a credit card voucher, signing a delivery order, etc.

Note 3: The parties interested in a transaction may be the parties themselves or their representatives (for example the employee in a filling station or the driver of a truck).

Note 4: In attended service mode the measurement operation ends at the moment settlement of the transaction takes place.

3.3.4
unattended service mode

operating mode of a self-service arrangement in which the self-service arrangement controls the authorization for the delivery, based on an action of the customer

Note: In unattended service mode, the end of the measurement operation is the end of the registration (printing and/or memorizing) of information concerning the measurement operation.

3.3.5
pre-payment

type of payment in attended or unattended service mode requiring payment for a quantity of gas before the delivery commences

3.3.6
attended post-payment (or post-payment)

type of payment in attended service mode requiring payment for the delivered quantity after the delivery but before the customer leaves the site of the delivery

3.3.7
unattended post-payment (or delayed payment)

type of payment in unattended service mode in which payment for the delivered quantity is required after the delivery, but in which the transaction is not settled when the customer leaves the site, following an implicit agreement with the supplier

3.3.8
authorization of a measuring system

operation that brings the measuring system into a condition suitable for the commencement of the delivery

3.4 Tests and test conditions

3.4.1
influence quantity

quantity that, in a direct measurement, does not affect the quantity that is actually measured, but affects the relation between the indication and the measurement result

[OIML V 2-200:2012, 2.52] [OIML V 1:2013, 0.07]

3.4.2
influence factor

influence quantity having a value which ranges within the rated operating conditions of a measuring instrument

[OIML V 1:2013,5.18]

3.4.3
disturbance

influence quantity having a value ranging within the limits specified in the relevant Recommendation, but outside the specified rated operating conditions of a measuring instrument

[OIML V 1:2013, 5.19]

3.4.4
performance test

test intended to verify whether the measuring system under test (EUT) is able to accomplish its intended functions

[OIML V 1:2013, 5.21]

3.4.5
bank

reservoir or set of reservoirs connected together, which form(s) part of a multi-segment gas storage system and for which the segments operate at different pressure levels from one another in refueling systems fitted with or using a sequential control device (see 3.4.6)

3.4.6
sequential control device

device which allows switching from a bank to another one. This device may be included in a measuring system or may be part of the refueling station

3.5 Abbreviations and symbols used

Parameters presented in **bold** concern the rated operating conditions

AC Alternating Current
AM Amplitude Modulation
ASD Acceleration Spectral Density
CGF Compressed Gaseous Fuel
DC Direct Current
E_{min} Minimum specified mass deviation
EM Electro Magnetic
EMC Electro Magnetic Compatibility
e.m.f. electromotive force
ESD Electrostatic Discharge
EUT Equipment Under Test [OIML V 1:2013, 4.16]
IEC International Electrotechnical Commission
ISO International Organization for Standardization
MMQ Minimum Measured Quantity
MPE Maximum Permissible Error
OIML International Organization of Legal Metrology
$\boldsymbol{P_{min}}$ Minimum pressure of the gas
$\boldsymbol{P_{max}}$ Maximum pressure of the gas
$\boldsymbol{P_{st}}$ Maximum pressure of the gas in the refueling station gas storage
$\boldsymbol{P_{v}}$ Allowed maximum gas pressure during fast filling of the vehicle
Q_{min} Minimum flow rate
Q_{max} Maximum flow rate
RMS Average (Root Mean Square)
$\boldsymbol{T_{ah}}$ Highest ambient temperature
$\boldsymbol{T_{al}}$ Lowest ambient temperature
$\boldsymbol{T_{min}}$ Minimum temperature of the gas
$\boldsymbol{T_{max}}$ Maximum temperature of the gas
U_{nom} Nominal voltage of power supply
V_d Test reservoir volume
V_{min} Minimum test receiver volume

4 Description of the measuring system and its constituents

4.1 Constituents of the measuring system

4.1.1 The measuring system shall include at least:

a) meter;
b) pressure and/or flow control device;
c) emergency power supply;
d) transfer point;
e) gas piping;
f) zero-setting device.

4.1.2 The measuring system may also be provided with the following other ancillary and additional devices:

a) calculator;
b) associated measuring instruments;
c) pressure gauge;
d) digital indicating device;
e) self-service arrangement;
f) presetting device;
g) memory device;
h) price indicating device;
i) printing device;
j) heat exchanging device;
k) other ancillary and additional devices.

4.2 Constituents of the meter

A meter itself is not a measuring system.

4.2.1 The meter shall include:

a) sensor;
b) measurement transducer;
c) indicating device;
d) metering calculator.

4.2.2 The meter may include:

a) adjustment device;
b) correction device.

4.2.3 A measuring system shall include only one meter.

Note: If several meters intended for separate measuring operations have common elements (calculator filter, etc.) each meter is considered to form, with the common elements, a measuring system.

4.2.4 The typical configuration of measuring system (including the meter) is given in Figure 1.

Note: The “devices” listed in 4.1 and 4.2 can be functions rather than physical devices (see also 3.1.4).

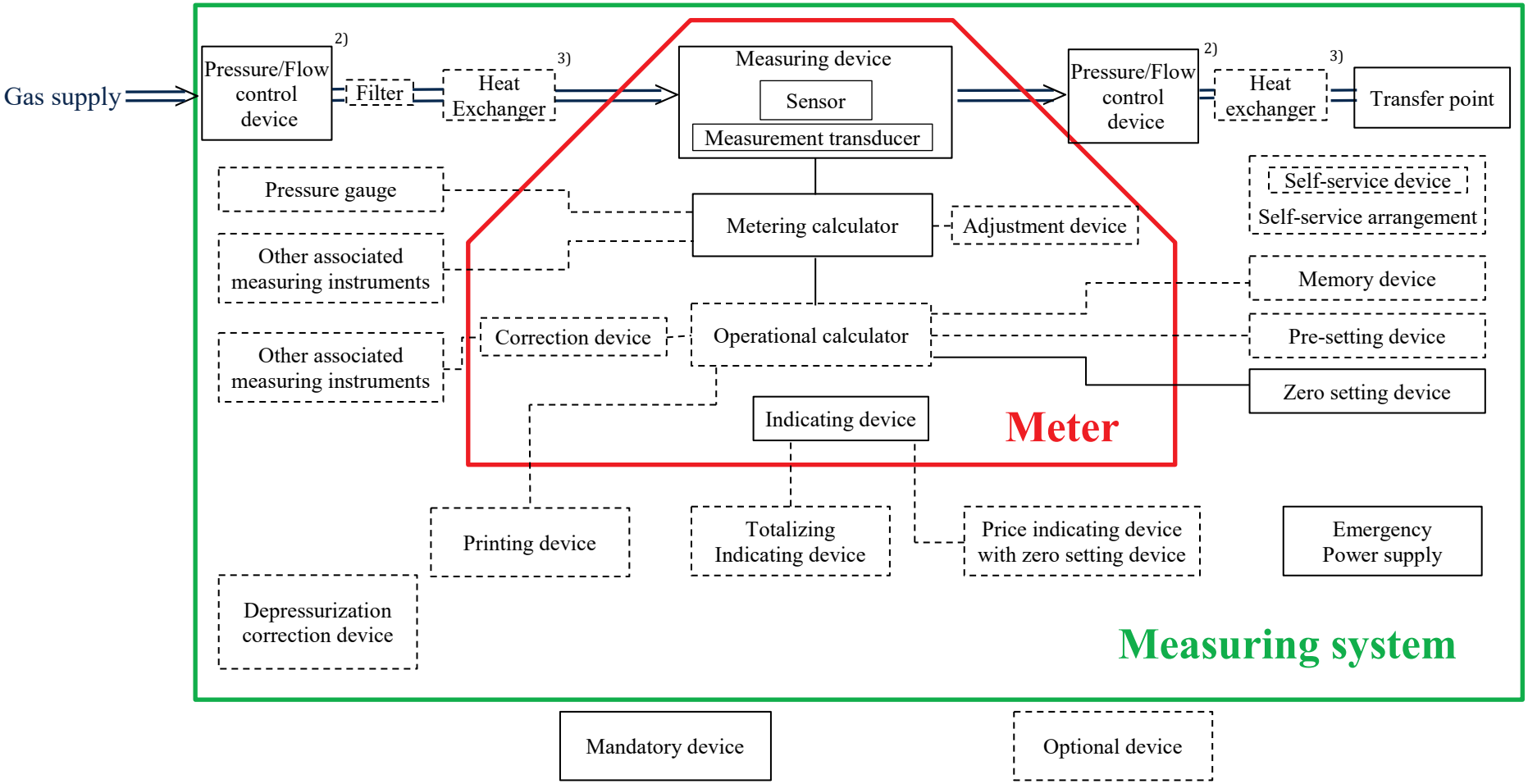

Figure 1 - Constituents of a typical compressed gaseous fuel measuring system for vehicles

[2] Pressure/Flow control device can be placed either upstream or at downstream of the meter.

5 Metrological requirements for the measuring system

5.1 Presentation of the measurement result

The presentation of the measurement results shall be unambiguous for all parties affected.

5.1.1 Units of measurement

The measurement result shall be displayed and/or printed in SI units of mass.

Where applied, volume or other quantities shall be indicated in the applicable SI unit.

If units of measurement not included in the SI are required by national regulations of a specific country or state, these units of measurement shall be considered acceptable for indications within this specific area only. In international trade, the officially agreed conversion factors between these units of measurement and those of the SI shall be applied. Any displayed or printed measurement result shall be clearly provided with the applicable unit symbol or name.

5.1.2 Scale interval

5.1.2.1 The scale interval shall be in the form 1×10^n, 2×10^n or 5×10^n, where n is a positive or negative whole number, or zero.

5.1.2.2 The scale interval shall be equal to or smaller than half the minimum specified mass deviation (see note in 5.2.4).

5.1.2.3 Non-significant scale intervals should be avoided.

Note: This clause does not concern price indications.

5.1.3 Multiple indicating (or printing) devices

A measuring system may have several devices that indicate or print the same measurement result. Each shall meet the requirements of this Recommendation if subject to control. The scale intervals of the various indications or printouts shall be the same. For any measured quantity relating to the same measurement, there shall be no difference between the indications of multiple indicating or printing devices.

5.2 Maximum permissible error (MPE)

5.2.1 Without prejudice to 5.2.3, the maximum permissible error on mass indications, positive or negative, is equal to the values presented in Table 1:

Table 1 - MPE values

Accuracy class		MPE for the meter [in % of the measured quantity value]	MPE for the complete measuring system [in % of the measured quantity value]	
			at type evaluation, initial or subsequent verification	in-service inspection under rated operating conditions
For general application	1.5	1	1.5	2
For hydrogen only	2	1.5	2	3
	4	2	4	5

Note 1: National Authorities may decide whether subsequent verifications should be conducted and whether a different maximum permissible error should be applied for subsequent verification.

Note 2: "In service inspection" refers to an inspection at any moment within the period of time between verifications (refer to OIML D 16, 2.25).

Note 3: National authorities may decide whether in-service inspections should be conducted and whether a different maximum permissible error should be applied during in-service inspection.

Note 4: For hydrogen the accuracy class 2 is preferred though national authorities may decide to require the accuracy class 4.

Note 5: This Recommendation does not restrict the evaluation and approval of meters and measuring systems for measuring hydrogen to just classes 2 and 4. If requested by the manufacturer, it is allowable to evaluate such a meter or system applying the accuracy class 1.5 requirements and to approve a complying instrument/system for class 1.5.

5.2.2 The maximum permissible errors apply for all gases to be metered, all possible ambient conditions of temperatures and pressures, and all flow rates for which the system or the meter is intended to be used.

A measuring system or a meter shall be capable of fulfilling all requirements without adjustment or modification during the relevant evaluation procedure.

5.2.3 The maximum permissible error applicable to the minimum measured quantity is twice the corresponding value as stated in 5.2.1, where the minimum specified mass deviation (E_{min}) is presented by the following formula:

$$E_{min} = 2 \times \text{MMQ} \times R_{MPE} \text{ [g; kg]}$$

where: R_{MPE} = the maximum permissible error ratio according to 5.2.1 (in 5.2.1 expressed in percentages of the measured quantity value);

MMQ = the specified minimum measured quantity according to 5.3.2.

Inserting the values provided in 5.2.1 results in the Table 2 values:

Table 2 - E_{min}

Accuracy class	E_{min} [g; kg]		
	for the meter	for the complete measuring system	
		at type evaluation, initial or subsequent verification	at in-service inspection
1.5	0.02 MMQ	0.03 MMQ	0.04 MMQ
2	0.03 MMQ	0.04 MMQ	0.06 MMQ
4	0.04 MMQ	0.08 MMQ	0.1 MMQ

Note: The minimum specified mass deviation is a the maximum permissible error expressed as an absolute value.

5.2.4 Whatever the measured quantity may be, the magnitude of the maximum permissible error (expressed in units of mass) for the complete system is never less than the minimum specified mass deviation.

5.3 Measuring range

5.3.1 Flow rate

5.3.1.1 The flow measuring range is limited by the minimum flow rate Q_{min} and the maximum flow rate Q_{max} and shall be specified by the manufacturer of the system. This measuring range shall satisfy the conditions of use of the measuring system; the latter shall be designed so that the flow rate stays between the minimum flow rate and the maximum flow rate, except at the beginning and at the end of the measurement or during interruptions.

5.3.1.2 In normal conditions of use, a flow control system shall prevent the delivery of flow rates less than the minimum flow rate of the measuring system.

5.3.1.3 The measuring range of a measuring system shall be within the measuring range of each of its elements.

5.3.1.4 The ratio between the maximum flow rate and the minimum flow rate shall be at least 10.

5.3.2 Minimum measured quantity (MMQ)

5.3.2.1 The minimum measured quantity shall be specified by the manufacturer of the measuring system. It shall have the format 1×10^n, 2×10^n or 5×10^n kg, where n is a positive or negative whole number or zero and it shall satisfy the conditions of use of the measuring system.

5.3.2.2 The maximum value of the MMQ for CGF excluding hydrogen depends on the maximum flow rate in accordance with the ratios presented in Table 3.

Table 3 - Maximum value of the minimum measured quantity MMQ
(not applicable to hydrogen measuring systems)

	$Q_{max} \leq 4$	$4 < Q_{max} \leq 12$	$12 < Q_{max} \leq 30$	$30 < Q_{max} \leq 70$	$Q_{max} > 70$	kg/min
MMQ ≤	0.5	1	2	5	10	kg

5.3.2.3 The maximum value of the MMQ for all types of hydrogen CGF measuring systems is 1 kg.

5.4 Repeatability

5.4.1 For any quantity of the measurand equal to or greater than 1000 scale intervals of the meter, the repeatability error of the meter and of the measuring system shall not exceed two thirds ($^2/_3$) of the applicable MPE.

5.4.2 This requirement concerning repeatability shall be met durably, which shall be demonstrated during the type evaluation.

5.5 Specifications of ambient conditions and rated operating conditions

5.5.1 Ambient conditions

The manufacturer may specify ambient conditions for a meter or system, based on the intended use of the instrument or devices taking into account Table 4 (Rated operating conditions). The identification plate and the operating instructions shall indicate the corresponding limits of use (see clauses 7 and 8).

5.5.2 Rated operating conditions

Meters and measuring systems according to this Recommendation shall be designed and manufactured such that their metrological functions are safeguarded and their errors do not exceed the maximum permissible errors under the following rated operating conditions:

Table 4 - Rated operating conditions

a)	High ambient temperature (T_{ah}) (1)	+30 °C, +40 °C, +55 °C, +70 °C or +85 °C (2)	Temperature range at least 40 °C
b)	Low ambient temperature (T_{al}) (1)	+5 °C, –10 °C, –25 °C, or –40 °C (2)	
c)	Temperature of the gas	As specified by the manufacturer	
d)	Pressure of the gas	As specified by the manufacturer	
e)	Relative humidity	As specified by the manufacturer (4)	
f)	Vibrations (random)	As specified by the manufacturer but normally not to exceed 10 Hz – 150 Hz, 1.6 $m.s^{-2}$, 0.05 $m^2.s^{-3}$, –3 dB/octave which is defined to be the level of vibrations related to environmental class M2, unless the manufacturer specifies higher insusceptibility levels (5) (6)	
g)	DC mains voltage/ Voltage of internal battery (3)	As specified by the manufacturer	
h)	Voltage of road vehicle battery	As specified by the manufacturer (12 ± 4)V and/or (24 ± 8)V (7)	
i)	AC mains voltage (3)	U_{nom} – 15 % to U_{nom} + 10 %	

(1) These temperatures refer only to the ambient temperature. The temperature of the gas may be different but the range shall cover at least +10 °C to +40 °C. (2) These values are to be decided by national legislation, as they depend on the climatic conditions and the expected conditions of application (indoors, outdoors, etc.) which vary in different countries.

(3) Whatever is applicable.

(4) A choice may be made between:

- those instruments or parts of instruments typically to be used in closed (weather protected) locations where the local climate is not controlled;
- those instruments or parts of instruments to be used in open air locations.

(5) At least for mobile dispensers the environmental random vibration is considered more intense than delimited by the specified conditions for environmental class M2.

If a meter or measuring system is expected during its operation to only become exposed to vibrations of low significance, for example instruments fastened to light supporting structures subject to negligible vibrations and shocks, the applicable meter or measuring system shall be marked environmental class M1. If the meter or measuring system is expected during its operation to become exposed to high levels of vibrations and shocks transmitted from sources such as adjacent engines or vehicles passing by in the vicinity, the meter / measuring system shall withstand the level of vibrations specified in Table 4.f and shall be marked class M2.

(6) The specified operating condition is not related to any influences by compressors or possible other sources of vibration which are part of the measuring system itself and for which the installation requirements 6.14.6, 6.14.7 and 6.14.8 apply.

(7) In conformity with ISO 16750-2.

5.6 Significant fault

5.6.1 Concerning the mass being measured, a significant fault is a fault the magnitude of which exceeds the larger of these two fault limit values:

a) one tenth of the magnitude of the maximum permissible error at type evaluation for the measuring system for the mass measured;

b) the minimum specified mass deviation.

5.6.2 Concerning the amount (of money) to pay, a significant fault is a fault in the displayed or printed amount that exceeds the corresponding fault limit value for the mass.

Note: No fault is allowed in the unit price.

5.6.3 The following faults are not considered to be significant faults:

a) faults arising from simultaneous and mutually independent causes in the measuring instrument itself or in its checking facilities;

b) transitory faults that are momentary variations in the indication, which cannot be interpreted, memorized or transmitted as a measurement result;

c) faults implying the impossibility of performing any measurement.

5.7 Disturbances

Measuring systems within the scope of this Recommendation shall be designed and manufactured such that, when exposed to the disturbances as specified in Table 3, Table 4 (if applicable) and Table 7:

a) either significant faults do not occur; or

b) significant faults are detected and acted upon by means of checking facilities.

The provisions in a) and b) may be applied separately to

- each individual cause of significant fault, and/or
- each part of the measuring system.

The choice of whether a) or b) is applied is left to the manufacturer.

5.7.1 Disturbances to which the measuring system is expected to be exposed during full operation

Table 5 - Disturbances during full operation

a)	RF electromagnetic fields	Up to 3 GHz, up to 10 V/m
b)	Common mode currents induced by RF electromagnetic fields	Up to 80 MHz, up to 3 V (e.m.f.)
c)	Bursts (transients) on AC and DC mains lines	Amplitude 1 kV, repetition rate 5 kHz
d)	Bursts (transients) on signal, data and control lines	Amplitude 0.5 kV, repetition rate 5 kHz
e)	AC mains voltage dips and short interruptions	0.5 cycles to 0 % 1 cycle to 0 % 10/12[(1)] cycles to 40 % 25/30[(1)] cycles to 70 % 250/300[(1)] cycles to 80 %
f)	Voltage dips, short interruptions and voltage variations on DC mains power	40 % and 70 % of the rated voltage during 0.1 s 0 % of the rated voltage during 0.01 s 85 % and 120 % of the rated voltage during 10 s
g)	Ripple on DC input power	2 % of the nominal DC voltage
(1)	For 50 Hz/ 60 Hz respectively	

5.7.2 Additional disturbances to which the measuring system is expected to be exposed during full operation when installed in an industrial environment

Table 6 - Additional disturbances during full operation in an industrial environment

a)	Common mode currents induced by RF electromagnetic fields	Up to 80 MHz, up to10 V (e.m.f.)
b)	Bursts (transients) on AC and DC mains lines	Amplitude 2 kV, repetition rate 5 kHz
c)	Bursts (transients) on signal, data and control lines	Amplitude 1 kV, repetition rate 5 kHz

5.7.3 Disturbances to which the measuring system is expected to be exposed before being in full operation:

Table 7 - Disturbances before being in full operation

a)	Damp heat, cyclic (condensing)	At T_{ah} °C, R.H. > 93 %
b)	Electrostatic discharge	Contact discharge: 6 kV Air discharge: 8 kV
c)	Surges line to line on mains power and unbalanced signal data and control lines	1 kV
d)	Surges line to earth on mains power and signal data and control lines	2 kV

Note: A fault equal to or smaller than a fault considered a significant fault according to 5.6.1 (fault limit) is allowed irrespective of the value of the error of indication.

5.8 Durability

5.8.1 The requirements in 5.5.2 and 5.7 shall be met durably. For this purpose the measuring systems shall be provided with checking facilities as specified in 6.10.

5.8.2 Following a period of operation in which the meter in normal use registers (indicates) a total mass equivalent to at least 100 hours of operation at 0.8 Q_{max} the meter shall not show a significant durability error. For the purpose of this Recommendation a significant durability error is a durability error, the magnitude of which equals or exceeds ± 1 % of the measured quantity.

Note: While this is a forecasting issue, different approaches may be applied during the tests on verification of compliance. One possible alternative to obtain the required information on fulfillment of the required durability performance criterion is the satisfactory completion of 2000 deliveries in actual use without showing a significant durability error. A possible alternative for meters without moving parts is to provide documented information showing the fulfillment of the durability performance criterion.

6 Technical requirements for the measuring system

6.1 Construction

6.1.1 The measuring system and, if applicable, its modules shall be designed to suit its intended purpose. They shall be solidly and carefully constructed in order to ensure that they maintain their metrological qualities during a reasonable period of use.

6.1.2 Measuring systems may consist of more than one bank of vessels differing in maximum compression level.

6.1.3 A measuring system shall be constructed in such a way that the opportunity for unintentional, accidental, or intentional misuse is minimized.

6.1.4 For measuring systems having a common bank of storage tanks, all measuring systems shall simultaneously maintain the minimum flowrate and no individual measuring system shall exceed the maximum flowrate when the others are switched off.

6.2 Presentation of measured value

In addition to the required way of presentation as laid down in 5.1, the additional requirements below apply.

6.2.1 Indicating device

The meter shall be equipped with a digital indicating device displaying the mass of gas measured.

National authorities may allow the mass indication to be complemented with a secondary (informative) indication of volume, energy or other quantity, provided the status of this informative indication is clear and unambiguous and is not misleading with respect to the actual amount. Moreover in this case, the conversion factor used for converting from mass to the secondary indication shall be displayed on the front face of the measuring system. The indicated converted value is permitted to only deviate from the original indication by the rounding error.

If the system is fitted with a price indicating device, it shall be imposed that

a) indications of unit price and price to be paid are related only to mass, and
b) these indications are displayed only when displaying the mass.

6.2.1.1 Size of the figures

The height for the figures of the digital display device shall be equal to or greater than 10 mm.

6.2.1.2 Grouping of numbers and decimal separator

Displayed or printed numbers may be divided into groups of three in order to facilitate reading. Neither dots nor commas shall be inserted in the space between groups.

If the magnitude of the number is less than unity, the decimal separator should be preceded by a zero.

The decimal marker displayed or printed by the measuring instrument shall be either a comma on the line or a point on the line. Use of the comma and/or the point is left to national habit or legislation.

Note: According to ISO 80000-1 (2009), 7.3.2, the decimal separator is either a point or a comma on the line. If the magnitude (absolute value) of the number is less than 1, the decimal separator should be preceded by a zero. It is customary to use a decimal point in documents in the English language, in the French language and in a number of other European languages except for some technical areas where a comma is always applied.

6.2.1.3 Reading of the results (on display as well as in print) shall be reliable, easy and unambiguous under conditions of normal use.

In addition to the requirements in 5.1, the figures forming the results shall be of a size, shape and clarity for reading to be easy.

The scales, numbering and printing shall permit the figures which form the results to be read by simple juxtaposition.

6.2.2 The common use of one and the same indicating device for indicating the measurement results of several measuring systems is authorized provided that it is impossible to use these measuring systems simultaneously and that the measuring system providing the actual indication is clearly identified. Where in such common use the indicating device is applied for different fluids (for example for compressed gasses as well as liquid fuels) the same provision applies provided that only the applicable unit of measurement, related to the indicated quantity value, is unchallengeable and clearly indicated (e.g. kg for mass, liter or cubic meter for volume).

6.2.3 When relevant, the provisions relating to mass indications apply also to price indications by analogy and to secondary indications of other quantities as well.

6.2.4 The continuous display of mass during the period of measurement is mandatory.

6.2.5 A digital indication or print shall display at least one figure beginning at the extreme right.

A decimal fraction shall be separated from its integer by a decimal separator (see 6.2.1.2), with the indication showing at least one figure to the left of the separator and all figures to the right.
Zero may be indicated by one zero to the extreme right, without a decimal separator.

6.2.6 If the instruments are connected to an external printing device or data storage, the data transmission from the instruments to the printing device shall be designed so that the results cannot be falsified.

It shall not be possible to print a document or store the measuring data in an external device for legal purposes if the instrument checking facility(ies) detect(s) the occurrence of a significant fault. In this case the internal data storage as required in 6.3 shall prevent any loss of data concerning previous measurements including some signal to indicate that a significant fault has been detected.

6.2.7 Price indicating device

6.2.7.1 A mass indicating device may be complemented with a price indicating device which displays both the unit price and the price to be paid.

The monetary unit or its symbol shall appear in the immediate vicinity of the indication.

6.2.7.2 The selected unit price shall be displayed by an indicating device before the start of the measurement. The unit price shall be adjustable; changing the unit price may be carried out either directly on the measuring system or through peripheral equipment.

The indicated unit price at the start of a measurement operation shall be valid for the whole transaction. A new unit price shall only be effective at the moment a new measurement operation may start.

A time of at least 5 seconds shall elapse between indicating a new unit price and before the next measurement operation can start, if the unit price is set from peripheral equipment.

6.2.7.3 Only rounding errors pertaining to the least significant digit of the price to be paid are authorized.

6.2.8 Printing device

6.2.8.1 If the measuring system is fitted with a printing device, any printing operation of measurement data of the current transaction shall be inhibited during the course of a measurement. The printing operation itself shall not initiate any change in the quantity indicated on the indicating device.

6.2.8.2 The printing device may print information identifying the measurement such as: sequence number, date, identification of the measuring system, type of gas, license plate, etc.

If the printing device is connected to more than one measuring system, it shall print the identification of the relevant system.

6.2.8.3 If a printing device allows repetition of the printing before a new delivery has started, copies shall be clearly marked as such, for example by printing "duplicate".

6.2.8.4 The printing device may print, in addition to the measured quantity, either the corresponding price or this price and the unit price.

6.2.8.5 Printing devices are also subject to the requirements in 6.10.5 *Checking facilities for ancillary devices*.

6.2.8.6 In addition to the requirements in 5.1, the following requirements apply to a printer:

a) printing shall be clear and permanent for the intended use. If relevant, the manufacturer shall specify the type of paper to be used in order to fulfill this requirement. It shall be ensured that the print does not fade and shall be readable for a period of at least three months;
b) printed numeric characters shall be at least 2 mm in height;
c) on the printout/hard copy, the name or the symbol of the unit of measurement shall be either to the right of the value or above a column of values;
d) in case the printer fails (for instance if it is switched off, out of paper or ink, or in case of disturbed communication), a warning shall be given or the measurement shall be prohibited;
e) in the case of an external printing device, the data transmission shall comply with 6.4.

6.3 Storing of measurement results (memory device; hardware)

The measurement results shall be recorded using sustainable means and shall include all information needed for identifying the particular measurement. This may be provided by means of a printout and/or by storage in a non-volatile memory.

6.3.1 Measuring systems may be fitted with a memory device to store measurement results until their use or to keep track of commercial transactions, providing proof in case of a dispute. It shall be assured that means are available for future recovery of the stored data.

These means shall be readily available during the whole life-cycle of the measuring system at

- the measuring system location, or
- any other appropriate location (for instance in the central office of the company that owns the measuring system).

6.3.2 The medium or means on which data are stored shall have sufficient permanency to ensure that the data will not become corrupted under normal storage conditions.

Note: For roadside measuring systems, storage for three months corresponding to normal use is advisable.

6.3.3 Storage shall be such that it is impossible in normal use to modify stored values (see also Annex A, A.2.3.2).

6.3.4 Memory devices shall be fitted with checking facilities according to 6.10.5. The aim of the checking facility is to ensure that stored data correspond to the data provided by the calculator and that restored data correspond to stored data.

It shall not be possible to store the measuring data in an external device if the instrument checking facility(ies) detect(s) the occurrence of a significant fault.

6.4 Data transmission

6.4.1.1 The instrument may be equipped with an interface permitting coupling to any peripheral devices or other instruments.

6.4.1.2 An interface shall not allow the metrological functions of the instruments or their measurement data to be inadmissibly influenced by the peripheral devices, by other interconnected instruments, or by disturbances acting on the interface.

6.4.1.3 Functions that are performed or initiated via an interface shall meet the relevant requirements and conditions of 6.11.

6.4.1.4 If the instrument is connected to a data printer or an external data storage device, the design of the data transmission shall ensure that the measuring results cannot be falsified.

6.5 Zero-setting device

6.5.1 Measuring systems shall be equipped with a zero-setting device for resetting the mass indicating device to zero.

6.5.1.1 The zero-setting device shall only permit the measurement result shown by the indicating device to be reset to zero.

6.5.1.2 After finishing a previous delivery any further delivery shall only be possible after a reset to the zero value indication.

6.5.1.3 Once the zeroing operation has started, it shall be impossible for the mass indicating device to show a result different from that of the measurement which has just been made, until the zeroing operation has been completed.

6.5.1.4 The measuring system shall not allow a reset to zero during measurement.

6.5.2 If the system also includes a price indicating device, this indicating device shall be fitted with a zero-setting device.

The zero-setting devices of the price indicating device and of the mass indicating device shall be designed in such a way that zeroing either indicating device automatically involves zeroing the other.

6.5.3 If the measuring system is designed so that registration of a mass quantity value could occur without any effective flow rate, a device shall register this apparent flow rate and compensate the measurement result for it.

6.6 Presetting device

6.6.1 Measuring systems may include a presetting device.

6.6.2 The selected quantity is preset by operating a digital device which indicates that quantity. The preset quantity shall be indicated before the start of the measurement.

6.6.3 Where it is possible to simultaneously view the figures of the display device of the presetting device and those of the mass indicating device, the former shall be clearly distinguishable from the latter.

6.6.4 Indication of the selected quantity may, during measurement, either remain unaltered or return progressively to zero. However, it is acceptable to indicate the preset value on the indicating device for mass by means of a special operation with the restriction that this value shall be replaced by the zero indication for mass before the measurement operation can start.

6.6.5 The difference found under normal operating conditions, between the preset quantity and the quantity shown by the mass indicating device at the end of the measurement operation, shall not exceed the minimum specified mass deviation.

6.6.6 The preset quantities shall be expressed in units of mass according to 5.1.1. This unit or its legal symbol shall be marked on the presetting device.

6.6.7 The scale interval of the presetting device shall be equal to the scale interval of the indicating device.

6.6.8 Presetting devices may incorporate a device to permit the flow of gas to be stopped quickly when necessary.

6.6.9 Measuring systems with a price indicating device may also be fitted with a price presetting device which stops the flow of the gas when the quantity delivered corresponds to the preset price. The requirements in 6.6.2 to 6.6.8 apply by analogy.

6.7 Calculator

6.7.1 When calculators are evaluated separately the maximum permissible error, positive or negative, on the gas quantity indication is equal to 0.05 % of the applicable quantity value.

6.7.2 All information concerning parameters necessary for the elaboration of indications that are subject to legal metrology control, such as unit price, calculation table, correction polynomial, etc. shall be available in the calculator at the beginning of the measurement operation.

6.7.3 The calculator may be provided with interfaces permitting the coupling of peripheral equipment. When these interfaces are used, the instrument shall continue to function correctly and its correct metrological functioning shall not be affected.

6.8 Emergency power supply device

6.8.1 A measuring system shall be provided with an emergency power supply device allowing either

a) that all measuring functions be safeguarded during a failure of the principal power supply, or
b) that at the moment of a failure leading to stopping the flow, the data collected is saved and kept displayable on an indicating device, which is subject to legal metrology control, for a time sufficient to permit the completion of the current transaction.

In the situation as referred to in 6.8.1 b) an increase of the absolute value of the maximum permissible error for the indicated mass by 5 % of the minimum measured quantity is acceptable.

6.8.2 In case of a failure leading to stopping the flow, measuring systems shall be designed such that the operation of the display shall either

a) automatically continue for at least 15 minutes immediately following the failure of the principal electrical supply, or
b) be manually controlled during the one hour following the failure for a total time span of at least 5 minutes divided into one or several time periods.

In addition, measuring systems shall be designed such that when the power failure has lasted more than 15 s, an interrupted delivery cannot be continued after the power supply has been re-established.

6.9 Protection against fraud

A measuring system, including its ancillary devices installed according to the manufacturer's instructions, shall have no characteristics likely to facilitate its fraudulent use, neither by accidental nor by deliberate means when using the instrument in the normal manner. Possibilities for unintentional misuse shall be minimal. The general essential requirement dealing with fraudulent use shall be fulfilled in such a way that the interests of all parties involved in the transaction are protected.

6.9.1 As far as applicable, the following aspects shall be taken into account:

a) except for a reset of the indication to zero and setting the unit price, it shall be impossible to make any metrologically relevant adjustments without breaking the seals (see 9);
b) the possibility to change software shall comply with the requirements in 6.11;
c) the data transmission shall comply with 6.4;
d) the risk of a successful deliberate attempt to influence the measuring instrument by, for example, digital telephones, static magnets, etc. shall be minimized.

6.9.2 When an instrument complies with the requirements specified in 5.7.1 (Table 5) and if applicable 5.7.2 (Table 6) it is considered proven sufficiently immune for the RF electromagnetic immunity aspect of the risk referred to in 6.9.1 d).

6.10 Checking facilities

6.10.1 Action of checking facilities

The detection by the checking facilities of a significant fault and/or of incorrectness in the generation, transmission, processing and/or indication of measurement data shall result in an action.

The action of checking facilities depends on the type of facility.

6.10.1.1 The following action is applicable upon detection of a potential significant fault by checking facilities of type N:

- a visible or audible alarm for the attention of the operator.

6.10.1.2 The following action is applicable upon detection of a potential significant fault by checking facilities of type I or P:

- automatic correction of the fault; or
- only stopping the faulty device, where even without this device being in operation the measuring system continues to operate as required according to this Recommendation; or
- stopping the flow.

6.10.2 Checking facilities for the measurement transducer

6.10.2.1 Checking facilities shall be implemented which are able to verify the presence of the transducer, its correct operation and the correctness of data transmission.

6.10.2.2 These checking facilities shall be of type P and the checking shall occur at time intervals not exceeding the duration of the measurement of an amount of gas equal to the minimum specified mass deviation.

6.10.2.3 The design of the measuring system and the meter shall be such that it is possible to check during type evaluation that these checking facilities function correctly:

a) when disconnecting the transducer; or
b) when interrupting one of the sensor's pulse generators; or
c) when interrupting the electrical supply of the transducer.

6.10.2.4 This checking shall also be possible at initial verification unless the presence and the efficiency of the checking facility is ensured by the conformity to type.

6.10.3 Checking facilities for the calculator

6.10.3.1 Checking facilities for the calculator shall verify that the calculator system functions correctly and that the validity of the calculations made is ensured. No special means are required for indicating that these checking facilities function correctly.

6.10.3.2 The checking of the functioning of the calculation system shall be of type P or I. In the latter case, the checking shall occur at least every 5 minutes in the course of a delivery and at least once during a delivery.

The objective of the checking is to verify that

a) the values of all permanently memorized instructions and data are correct, by the application of such means as
    1) summing up all instruction and data codes and comparing the sum with a fixed value,
    2) line and column parity bits (LRC and VRC),
    3) cyclic redundancy checks (CRC 16),
    4) double independent storage of data,

5) storage of data in "safe coding", for example protected by checksum, line and column parity bits,

b) all procedures of internal transfer and storage of data relevant to the measurement result are performed correctly, by such means as

1) read-write routine,
2) conversion and reconversion of codes,
3) use of "safe coding" (checksum, parity bit),
4) double storage.

6.10.3.3 The checking of the validity of calculations shall be of type P. This consists of checking the correct value of all data related to the measurement whenever these data are internally stored or transmitted to peripheral equipment through an interface. This check may be carried out by such means as parity bit, checksum or double storage. In addition, the calculation system shall be provided with a means of controlling the continuity of the calculation program.

6.10.4 Checking facility for the indicating device

6.10.4.1 The checking facility for the indicating device shall verify that the primary indications are displayed and correspond to the data provided by the calculator.

6.10.4.2 The checking facility shall verify the presence of the indicating devices, in case these can be disconnected. In this case the checking facility of the indicating device generally should be of type P. However, it may be of type I if a primary indication is provided by some other device of the measuring system, or if the indication can easily be determined from other primary indications (for example, if a price indicating device is available in the presence of this indication it would be possible to determine the price to pay from the mass and the unit price).

6.10.4.3 It shall be possible to determine the presence and correct operation of the checking facility during type evaluation and verification either

a) by disconnecting all or part of the indicating device, or
b) by an action which simulates a failure in the display, such as using a test button.

6.10.4.4 Verifications by the checking facility referred to in 6.10.4.2 may be performed in one of two ways: either according to the option presented in 6.10.4.5, or the option presented in 6.10.4.6.

6.10.4.5 One option for the operation of the checking facility is an automatic verification of the complete indicating device.

For example, the following methods could be applied:

a) for indicating devices using incandescent filaments or LEDs: measuring the current in the filaments;
b) for indicating devices using fluorescent tubes: measuring the grid voltage;
c) for indicating devices using electromagnetic shutters: checking the impact of each shutter;
d) for indicating devices using multiplexed liquid crystals: output checking of the control voltage of segment lines and of common electrodes, so as to detect any disconnection or short circuit between control circuits.

6.10.4.6 The second option relates to checking both

- automatically the data transmitted to the indicating device and the electronic circuits used for the indicating device, excluding those to the driving circuits of the display itself,
- the display itself,

whereby the visual checking facility of the display shall be of type I and provide a visual checking sequence of the entire display and shall meet the following description:

a) displaying all the elements ("eights" test if appropriate);
b) blanking all the elements ("blank" test);
c) displaying "zeros",

of which each step of the sequence shall last at least 0.75 seconds.

It is, however, not required for a detected fault to result in one of the actions described in 6.10.1.

6.10.5 Checking facilities for ancillary devices

An ancillary device (repeating device, printing device, self-service device, memory device, etc.) shall include a checking facility of type I or P. The object of this checking facility is to verify the presence of the ancillary device, when it is a necessary device, and to verify the correct transmission of data from the calculator to the ancillary device. In particular, the checking of a printing device aims at ensuring that the printing controls correspond to the data transmitted by the calculator.

6.10.5.1 At least the following shall be checked:

a) presence of paper;
b) transmission of data; and
c) the electronic control circuits (except the driving circuits of the printing mechanism itself).

6.10.5.2 It shall be possible during type evaluation to check whether the checking facility of the printing device is functioning correctly by an action forcing a distortion of the printing. This action should be a simulated incorrectness in the generation, transmission (taking into account 6.10.2), processing, or indication of measurement data.

6.10.5.3 Where the action of the checking facility is a warning, this shall be provided by the ancillary device concerned or any other visible part of the measuring system.

6.10.6 Checking facilities for the associated measuring instruments

Associated measuring instruments shall include a checking facility of type P. The aim of this checking facility is to ensure that the signal given by these associated instruments is within a pre-determined measuring range.

Examples are:

a) four wire transmission for resistive sensors;
b) frequency filters for density meters;
c) control of the driving current for pressure sensors.

6.10.7 Zero flow response

6.10.7.1 All dispenser systems shall be fitted with a time-out device that terminates a single batch delivery should a period of inactivity (no flow) of more than 120 seconds occur during the transaction (i.e. the meter will need to be reset to zero before a next batch delivery may start and 6.14.3 has been taken into account).

6.10.7.2 All dispensers with electronic indicators shall be fitted with a time-out device that terminates a transaction (and thereupon the dispenser is reset to zero before a new delivery starts), should a period of inactivity (no flow) of more than 120 seconds occur during the transaction.

Note: A transaction can only be considered terminated when all the relevant metrological data is registered.

6.11 Software

The requirements concerning the software applied in the measuring systems within the scope of this Recommendation are presented in the mandatory Annex A.

6.12 Technical requirements for measuring systems with self-service arrangement

6.12.1 General requirements

6.12.1.1 Sealing requirements depend on national regulations. Installation requirements may depend on national or regional regulations. The guidance from the manufacturer of the measurement system shall be taken into account.

6.12.1.2 Where the self-service device serves two or more measuring systems, each measuring system shall be provided with a measuring system identification number that shall accompany any primary indication provided by the self-service device.

6.12.1.3 Indication of information that is not subject to metrological control is allowed, provided that it cannot be confused with metrological information.

6.12.1.4 The control device of the self-service device should be capable of indicating the status of the measuring systems (e.g. running, authorized or unauthorized) that are connected to the self-service device and in the case of multiple modes of service and/or type of payment also that particular status of the measuring system.

6.12.1.5 A change in the type of payment and/or mode of operation shall not be effective before the end of the current measurement operation.

6.12.1.6 The self-service arrangement, including provisions related to clearly defined methods of operation, shall be such that at least one primary indication for the benefit of the customer shall be available at least up to the settlement of the transaction to enable the delivered quantity and the price to pay to be checked. This indication for the customer shall be situated such, and be large enough to be easily readable for the customer during the filling process.

Note: For specific installations, this may require the use of larger characters than those prescribed in 5.1.3.

6.12.1.7 In the case of a self-service arrangement which totalizes the measured quantities for registered customers, the minimum measured quantity is not applicable to the totalized quantities but applies for each measurement which is taken into account in the totalized quantity.

6.12.2 Attended service mode

If the measuring system indicating device provides the only primary indication, provisions shall be made to inform the customer that the next authorization of a particular measuring system can only be given by the supplier after settlement of the current transaction.

6.12.2.1 Attended post-payment

6.12.2.1.1 Where the self-service arrangement includes a device that provides an additional primary indication to that of the indicating device of the measuring system, it shall comprise at least one device providing a reproduction of the mass quantity value and/or the price to pay, indicated by the measuring system indicating device and consist of

a) a printing device to issue a receipt for the customer, or
b) an indicating device for the benefit of the supplier together with a display for the benefit of the customer.

Note: As a consequence of 6.2.8.4, the reproduction of the mass and price is necessary when the measuring system can be authorized before the settlement of the transaction.

6.12.2.1.2 For self-service devices with temporary storage (temporary storage mode) of measurement data of measuring systems the following requirements apply:

a) temporary storage of measurement data shall be organized such that when the results are recalled, the association of the data with the measurement is unambiguous for each measuring system;
b) the necessary information shall be passed to the customer on the identification of the applicable measurement in the sequence of storage of measurements;

c) when a primary indication of the self-service device is out of service, the self-service arrangement may continue its operation provided that it no longer uses any temporary storage, and that the measuring system indicating device remains the primary indication.

6.12.2.1.3 Where the mandatory primary indication for the benefit of the customer is provided by an external device and this device becomes disconnected, or when a checking facility detects a faulty operation, the temporary storage mode shall be inhibited and the indicating device of the measuring system will remain the primary indication.

6.12.2.2 Pre-payment in attended service mode

6.12.2.2.1 The requirements of 6.6 are applicable.

6.12.2.2.2 A receipt of the prepaid amount shall be provided.

Note: If no printout is provided, a hand written receipt may be required. This, however, cannot be a requirement for the instrument. In general, the national legislation will state which parameters need to be registered for a legal transaction, especially e.g. regarding the taxes to be paid.

6.12.3 Unattended service mode

6.12.3.1 General

6.12.3.1.1 The self-service arrangement shall provide additional primary indications by means of

a) a printing device for the issue of a receipt to the customer, and
b) a printing or memory device on which measurement data are registered for the benefit of the supplier.

6.12.3.1.2 When the printing devices or memory device, as required in 6.12.3.1.1, are not able to provide any indication or are out of service, the customer shall be clearly warned by automatic means before the operation commences.

Passing from attended to unattended service mode shall not be possible before correct operation of the arrangement is concluded as feasible by the checking facilities, including compliance with the above provision.

6.12.3.1.3 Where the self-service arrangement is provided with individual volume totalizers, one for each registered customer and visible to the customer, the provisions of 6.12.3.1.1 and 6.12.3.1.2 do not apply to measurements related to such customers.

6.12.3.1.4 Micro-processors, which upon disturbance or interference influence the measurement operation, shall be equipped with means for controlling the continuity of the processor program and for ensuring the discontinuation of the current delivery when the continuity of the processor program is no longer ensured.

The next effective acceptance of notes, cards or other equivalent mode of payment shall only take place if the continuity of the processor program is re-established.

6.12.3.1.5 When a power supply failure occurs, the delivery data shall be memorized. The requirements of 6.8.2 apply.

6.12.3.2 Delayed payment

The printed and/or memorized indications as mentioned in 6.12.3.1 shall contain sufficient information for further checking, including at least the measured quantity, the price to pay and information to identify the particular transaction (e.g. the measuring system number, location, date and time).

6.12.3.3 Pre-payment in unattended service mode

6.12.3.3.1 Following the termination of each delivery, the printed and/or memorized indications as intended in 6.12.3.1 shall be made available, clearly indicating the amount which has been prepaid and the price corresponding to the gas obtained.

These printed and/or memorized indications may be divided into two parts as follows:

a) one part provided prior to the delivery on which the pre-paid amount is shown and recognizable as such; and

b) one part provided following the termination of delivery, provided that it is clear from the information provided on both parts that they are related to the same delivery.

6.12.3.3.2 The requirements of 6.6 are applicable.

6.13 Battery-powered instruments

In addition to 5.5.2 g), the requirements in the following sub clauses apply for instruments powered by batteries:

Note: Non-rechargeable batteries are not intended to serve as a main power supply for an instrument and may only be applied as back-up battery according the provision in 6.13.2.

6.13.1 Rechargeable batteries

Instruments powered by rechargeable batteries that are intended to be (re)charged during the operation of the measuring instrument shall

a) with the mains power switched off, comply with the following requirements:

1) the instrument provided with new and/or fully charged batteries of the specified type shall comply with the metrological requirements;

2) as soon as the battery voltage has dropped below a level with the value specified by the manufacturer as the minimum voltage level at which the instrument complies with the metrological requirements, this shall be detected and acted upon by the instrument;

3) the instrument shall initiate a warning to the operator at least 15 minutes before the battery voltage has dropped to the minimum voltage level as referred to in 2).

b) with the mains power switched on, comply with the requirements for AC mains powered instruments.

6.13.2 Back-up batteries

6.13.2.1 Instruments powered by the mains power and provided with a back-up battery for data storage only, shall comply with the requirements for AC mains powered instruments.

6.13.2.2 The provisions of 6.13.1 a) do not apply for back-up batteries.

6.14 Installation of the measuring system

6.14.1 Additional devices likely to be installed in a measuring system shall not corrupt the metrological behavior of the measuring instrument.

6.14.2 No means shall be provided by which any measured gas can be diverted downstream of the meter during a filling operation.

6.14.3 The design of the system shall ensure that the measured quantity is delivered. In particular, if the hose downstream of the meter is likely to be depressurized between two deliveries this shall lead for instance to systematic correction or repressurizing before counting for the next delivery.

Whatever the operating principle is (repressurizing or not), in particular whatever constitutes the hose or the transfer point, in the worst measuring conditions, the residual mass which is measured, though not delivered and no correction is made by the CGF measuring system, shall be smaller than or equal to

- one third of the minimum specified mass deviation for a hydrogen CGF measuring system,

- half the minimum specified mass deviation for any CGF measuring system except those for hydrogen.

Note 1: The purpose of this provision is not to allow a systematic deviation

Note 2 Refer to Annex B (informative) for detailed information on the typical methods applied for correction of the depressurization quantity of hydrogen CGF measuring systems.

Note 3: Due to the high pressure of the hydrogen gas there will be a deviation between mass measured and the actual mass delivered which will make it necessary to correct for the mass which is measured but not delivered.

6.14.4 If there is a risk that the supply conditions can provide a flow rate exceeding the Q_{max} of the measuring system, a flow limiting device shall be provided. It shall be possible to seal it.

6.14.5 There shall be a provision for fitting and removing a pressure gauge on the measuring system in order to check P_{max}, and, if critical, P_{min}.

6.14.6 Flowmeters shall be mounted sufficiently isolated from the compressors such that the influence of vibrations on the measuring will be negligible.

6.14.7 The frequency range of an applied Coriolis meter shall not be correlated to the compressor vibrations frequency range.

6.14.8 Documented information shall be provided as part of the documentation specified in 8.2 d) about the measures taken to prevent the meter from becoming influenced by compressors or possible other sources of vibration which are part of the measuring system and which are located in the vicinity of the meter.

7 Markings

7.1 Each measuring system, meter or other module for which type approval has been granted shall bear a permanent, non-transferable, and easily readable identification plate or label giving the following information:

a) manufacturer's trade mark/corporate name;
b) year of manufacture;
c) type designation / model number;
d) accuracy class (for hydrogen CGF measuring system only);
e) type approval number and (area allowed for) verification marks, according to national legislation;
f) serial number of the measuring system and, if applicable, of each of the modules.

7.2 The minimum measured quantity (MMQ) shall be permanently visible on the front of the indicating device.

7.3 The following metrological and technical characteristics, where applicable, shall be provided either on the identification plate, or may be visible either permanently, or on demand on the indicating device, as appropriate:

a) metrological characteristics:
- measuring range (minimum flow rate, Q_{min}, and maximum flow rate, Q_{max});
- maximum pressure of the gas in the refueling station gas storage, P_{st};
- maximum fast fill pressure of the gas-fuelled vehicle, P_v;
- if critical, minimum pressure of the gas, P_{min};
- maximum pressure of the gas, P_{max};
- type(s) of the gas (mixtures) to be measured (e.g. natural gas, or hydrogen);
- if applicable, information on density, composition, quality, etc. where related to the mass measurement characteristics;
- maximum temperature of the gas, T_{max};
- minimum temperature of the gas, T_{min}.

- ambient temperature range;
- the applicable environmental class M1 or M2.

b) details of the electrical power:
- in the case of mains power: nominal mains voltage, frequency and power required;
- in the case of battery powered instruments and/or internal removable back-up battery: the type (containing the information on the minimum capacity) and nominal voltage of the battery;
- identification of the software (see 6.11);
- presence of a sequential control device and the operational mode; where relevant: the maximum allowed speed of switching between banks for the sequential control device;
- any required additional information as stated in the type approval certificate.

The markings required for each component may be combined on a single identification plate.

7.4 The markings on the front of the indicating device of a meter shall not contravene those on the identification plate of the measuring system comprising this meter.

8 Instruction manual

8.1 The instructions for operation of each individual measuring system shall be made available to the user[3] by means of a printed or printable instruction manual.

8.2 The text used in the instruction manual shall be in the official language(s) of the country (or another generally accepted language according to national legislation) and easily understandable. Its contents shall at least include

a) operating instructions,
b) rated operating conditions (see 5.5.2),
c) warm-up time after switching on the electrical power,
d) all other relevant mechanical and electromagnetic environmental conditions,
e) for instruments powered by an external power converter or battery: specifications of this power converter or battery,
f) if applicable: details about compatibility with ancillary equipment,
g) any specific installation conditions such as, for instance, a limitation of the length of signal, data, and control lines,
h) instructions for installation, maintenance, repairs, permissible adjustments (this can be in a separate document, not intended for the user/owner),
i) conditions for compatibility with interfaces, sub-assemblies (modules) or other measuring instruments,
j) minimum measured quantity MMQ,
k) minimum flow rate, Q_{min}, and maximum flow rate, Q_{max},
l) maximum pressure of the gas in the refueling station gas storage, P_{st},
m) maximum fast fill pressure of the gas-fuelled vehicle, P_v,
n) if critical, minimum pressure of the gas, P_{min},
o) if appropriate, nature and characteristics of the gases to be measured,
p) maximum temperature of the gas, T_{max},

3 In the scope of this Recommendation "user" is not to be interpreted as the fuel purchasing customer.

q) minimum temperature of the gas, T_{min},

r) environmental restrictions (see 5.7.1 and 5.7.2),

s) the maximum length of the hose.

Note 1: The maximum and minimum temperatures of the gas T_{max} and T_{min} are those in the measuring transducer when measuring.

Note 2: The environmental class may be different according to devices of the measuring system, provided that each device is used according to its own environmental class. In particular, this is applicable to some parts of a self-service device which can be used at different temperatures than the rest of the measuring system.

9 Sealing

9.1 General

9.1.1 Effective sealing shall be provided on all parts of the measuring system which cannot be materially protected in any other way against operations liable to affect the measurement accuracy (see also 6.14.4, 6.12.1.1 and Annex A).

9.1.2 Sealing devices shall prohibit the changing of any parameter that participates in the determination of measurement results (parameters for correction or adjustment and conversion in particular).

9.1.3 Sealing is preferably carried out by means of hardware seals. However, other types of sealing are permitted when these seals provide sufficient integrity, e.g. electronic seals.

9.1.4 The seals shall, in all cases, be easily accessible.

9.2 Electronic sealing devices

9.2.1 When access to parameters that contribute to the determination of the measurement result is not protected by mechanical sealing devices, the protection shall fulfil the provisions of 9.2.1.1 to 9.2.1.5.

9.2.1.1 Either:

a) access shall only be granted to authorized persons, e.g. by using a “password” and, after changing parameters, the measuring system may be put into use “in sealed condition” again without any restriction; or

b) access is granted without restrictions (similar to classical sealing) but, after changing parameters, the measuring system shall only be put into use “in sealed condition” again by authorized persons, e.g. by using a “password”.

9.2.1.2 The “password” shall be changeable.

9.2.1.3 In the case of direct selling to the public, the use of only a “password” is not allowed and the measuring system shall be provided with a mechanical sealing device, e.g. access cover protected switch or key switch.

9.2.1.4 When it is in the configuration mode (a mode in which parameters can be changed), the device shall either not operate or it shall clearly indicate that it is in the configuration mode. This status shall remain until the measuring system has been put into use “in sealed condition” in accordance with 9.2.1.1.

9.2.1.5 For identification, data concerning the latest intervention(s) shall be automatically recorded in an event logger, complying with the following requirements:

a) the produced record shall include at least

1) an event counter,

2) the date on which the parameter was changed,

3) the new value of the parameter, and

4) the identification of the person that implemented the intervention;

b) the traceability of the most recent intervention shall be assured;

c) the event logger shall be capable of storing at least 999 interventions (covering at least the period between legally required (re-)verifications); and

d) the first-in first-out (FIFO) principle shall be applied in case insufficient memory capacity remains to store a new record.

9.2.2 For measuring systems with parts which may be disconnected from each other by the user and which are interchangeable, the following provisions shall be fulfilled:

a) it shall not be possible to access parameters that contribute to the determination of measurement results through disconnected points unless the provisions in 9.2.1 are fulfilled; and

b) insertion of any device which may influence the accuracy shall be prevented by means of electronic and data processing securities or, if not possible, by mechanical means.

9.2.3 For measuring systems with parts which may be disconnected from each other by the user and which are not interchangeable, the provisions in 9.2.2 apply. Moreover, these measuring systems shall be provided with devices which do not allow them to operate if the various parts are not associated according to the manufacturer's configuration.

Note: Disconnections which are not allowed by the user may be prevented, for example by means of a device that prevents any measurement after disconnecting and reconnecting.

10 Stamping plate

A plate, referred to as the stamping plate, the purpose of which is to receive the control marks, shall be sealed or permanently attached on a support of the measuring system. It may be combined with the identification plate of the measuring system referred to in 7.1.

11 Suitability for testing

11.1 The measuring system and, if applicable, its modules shall permit the tests and evaluation according to the applicable clauses in Part 2 of this Recommendation to be performed.

11.2 It shall be possible to identify modules that have been subject to a separate type examination procedure (meters, printers, etc.).

11.3 The design of the instrument shall be such that initial and subsequent verification and metrological supervision can be carried out on site according to the applicable clauses in Part 2 of this Recommendation, without unreasonable effort.

12 Presumption of compliance

The type of a measuring instrument according to this Recommendation is presumed to comply with the provisions in this Part 1 of the Recommendation if it passes the examination and tests specified in Part 2 of this Recommendation.

13 Specific requirements for ancillary devices

13.1 Ancillary devices may be a part of the calculator or of the meter, or may for example be peripheral equipment connected through an interface to the calculator.

As a rule, ancillary devices are optional. However, some may be required or prohibited as prescribed in this Recommendation.

Note: Some ancillary devices may or may not be mandatory and/or subject to legal metrological control according to their functionality and/or utilization in the measuring system or according to national regulations.

13.2 When these ancillary devices are mandatory in application of this Recommendation or by national or international regulation, they are considered to be integral parts of the measuring system, they are subject to control, and they shall meet the requirements of this Recommendation.

13.3 When ancillary devices are not subject to legal control, these devices shall not affect the correct operation of the measuring system. In particular, the system shall continue to operate correctly and its metrological functions shall not be affected when the peripheral equipment is connected or disconnected.

In addition, when a measurement result is visible and displayed to the user by such a device it shall show a statement that is clearly visible to this user to indicate that it is out of legal control. Such a statement shall also be present on each printout likely to be made available to the customer.

14 Transfer point

14.1 Measuring systems shall incorporate a transfer point. This transfer point is located downstream of the meter.

14.2 Two or more delivery transfer points may be permanently installed and operated simultaneously or alternately provided so that any diversion of gas to other than the intended receiving receptacle(s) cannot be readily accomplished or is readily apparent. Such means include, for example, physical barriers, visible valves or indications that make it clear which transfer points are in operation, and explanatory signs, if necessary.

14.3 When only one transfer point can be used during a delivery, and after the nozzle of the transfer point has been placed back on its slot, the next delivery shall be inhibited until the indicating device has been reset to zero.

When two or more transfer points can be used simultaneously or alternately, and after the utilized nozzles of the transfer points have been placed back on their slots, the next delivery shall be inhibited until the indicating device has been reset to zero. Moreover, by design, the provisions of 14.2 shall be fulfilled.

15 Additional requirements for specific modules

15.1 Meter

The meter shall meet the following requirements specified in the following subclauses.

15.1.1 Metrological specifications of the meter

15.1.1.1 The field of operation of a meter shall be specified by the manufacturer and is determined at least by the following characteristics:

a) measuring range limited by the minimum flow rate, Q_{min}, and the maximum flow rate, Q_{max};
b) maximum pressure of the gas, P_{max};
c) if critical, minimum pressure of the gas, P_{min};
d) if appropriate, nature and characteristics of the gases to be measured;
e) maximum temperature of the gas, $T_{max;}$
f) minimum temperature of the gas, T_{min}.

15.1.1.2 The temperature range of the gas shall cover at least +10 °C to +40 °C. The rated operating conditions of the meter are the same as those for the complete measurement system. In any case the ranges shall suit the conditions of use.

15.1.2 Additional technical requirements for meters

15.1.2.1 Connections between the flow sensor and the indicating device

The connections between the flow sensor and the indicating device shall be reliable and, for electronic devices, durable, in accordance with 5.8.1, 6.10.2 and 6.10.4.

15.1.2.2 Adjustment device

The following applies to meter adjustment devices:

a) meters may be provided with an adjustment device which permits modification of the ratio between the indicated mass and the actual mass of gas passing through the meter, by a simple command;
b) when this adjustment device modifies this ratio in a discontinuous manner, the consecutive values of the ratio shall not differ by more than 0.001;
c) this device shall only be used to reduce the measurement error as much as possible;
d) adjustment by means of a bypass of the meter is prohibited.

15.1.2.3 Correction device

The aim of a correction device is to reduce the measurement error as much as possible. Measuring instruments or devices involved in the execution of the correction, if any, shall comply with the applicable International Standards or Recommendations. Their accuracy shall be sufficient to permit the requirements on the meter be met, as specified in 5.2.

The following applies to meter correction devices:

a) meters may be fitted with correction devices, which are considered to be an integral part of the meter. This implies that the whole set of the requirements which apply to the meter is applicable to the corrected mass. This in particular concerns the maximum permissible errors as specified in 5.2;
b) during normal operation, only the corrected mass values shall be displayed;
c) the use of this device for adjusting the errors of a meter to values other than as close as practical to zero is forbidden, even when these values are within the maximum permissible errors;
d) correction is only allowed on the basis of actual (measured) parameters. E.g. the correction device shall not allow the correction of a pre-estimated drift in relation to time or mass;
e) these associated measuring instruments shall be fitted with checking facilities, as specified in 6.10.6.

15.2 Additional technical requirements for external printers and external memory devices

External memory or external printing devices (separate modules) connected to the measuring instrument shall have a permanent, non-transferable, and easily readable identification plate or label giving the following information:

a) manufacturer's trade mark/corporate name;
b) type designation / model number;
c) type approval number;
d) serial number;
e) identification of the measuring instrument(s) of which the measurement results can be printed;
f) details of the electrical power:

g) in the case of mains power: nominal mains voltage, frequency and power required;
h) in the case of an internal removable battery: the type and nominal voltage of the battery;
i) if applicable: specific conditions for use (for instance specific ambient conditions);
j) if applicable: identification of the software (see 6.11).

Annex A
Requirements for software controlled compressed gaseous fuel measuring systems for vehicles

(Mandatory)

The specific software terminology is defined in OIML D 31:2008, Clause 3.

A.1 General requirements

A.1.1 Software identification

Legally relevant software of a measuring system and/or its constituents shall be clearly identified with the software version or any other token. The identification may consist of more than one part but at least one part shall be dedicated to the legal purpose.

The identification shall be inextricably linked to this software and shall be:

- presented or printed on command, or
- displayed during operation, or
- displayed when the measuring system is switched, if the measuring system can be switched on and off.

The software identification and the means of identification shall be stated in the type evaluation certificate.

A.1.2 Correctness of algorithms and functions

The measuring algorithms and functions of the measuring system and/or its constituents shall be appropriate and functionally correct.

It shall be possible to examine the algorithms and functions either by metrological tests, software tests or software examination.

A.1.3 Software protection (against fraud)

A.1.3.1 The legally relevant software shall be secured against unauthorized modification, loading, or changes by swapping the memory device. In addition to mechanical sealing, technical means may be necessary to protect measuring systems equipped with an operating system or an option to load software.

A.1.3.2 Only clearly documented functions (see A.3) are allowed to be activated by the user interface, which shall be realized in such a way that it does not facilitate fraudulent use.

A.1.3.3 Parameters that fix the legally relevant characteristics of the measuring system shall be secured against unauthorized modification. For the purpose of verification it shall be possible to display or print the current parameter settings.

Note: Device-specific parameters may be adjustable or selectable only in a special operational mode of the instrument. They may be classified as those that should be secured (unalterable) and those that may be accessed (settable parameters) by an authorized person, e.g. the instrument owner or product vendor.

A.1.3.4 Software protection comprises appropriate sealing by mechanical, electronic and/or cryptographic means, making an unauthorized intervention impossible or evident.

A.1.4 Support of fault detection

The detection by the checking facilities of faults so as to prevent significant faults from occurring may be achieved by software. In such a case, this detecting software is considered legally relevant.

The documentation to be submitted for type evaluation shall contain a list of parameters which may generate faults and will be detected by the software including the expected reaction and, if necessary for understanding the detection algorithm, its description.

A.2 Requirements specific for configurations

A.2.1 Specifying and separating relevant parts and specifying interfaces of parts

Metrologically critical parts of a measuring system – whether software or hardware parts – shall not be inadmissibly influenced by other parts of the measuring system.

This requirement applies if the measuring system and/or its constituents has interfaces for communicating with other electronic devices, with the user, or with other software parts next to the metrologically critical parts.

A.2.1.1 Separation of constituents of a measuring system

A.2.1.1.a Constituents of a measuring system that perform functions which are legally relevant shall be identified, clearly defined, and documented. These form the legally relevant part of the measuring system.

A.2.1.1.b It shall be demonstrated that the relevant functions and data of constituents cannot be inadmissibly influenced by commands received via an interface.

This implies that there is an unambiguous assignment of each command to all initiated functions or data changes in the constituent.

A.2.1.2 Separation of software parts

A.2.1.2.a All software modules (programs, subroutines, objects, etc.) that perform legally relevant functions or that contain legally relevant data domains form the legally relevant software part of a measuring system. This part shall be made identifiable as described in A.1.1.

If the separation of the software is not possible, the software is legally relevant as a whole.

A.2.1.2.b If the legally relevant software part communicates with other software parts, a software interface shall be defined. All communication shall be performed exclusively via this interface. The legally relevant software part and the interface shall be clearly documented. All legally relevant functions and data domains of the software shall be described to enable a type approval authority to decide on correct software separation.

The interface consists of program code and dedicated data domains. Defined coded commands or data are exchanged between the software parts by storing to the dedicated data domain by one software part and reading from it by the other. The writing and reading program code is part of the software interface.

The data domain forming the software interface including the code that exports from the legally relevant part to the interface data domain and the code that imports from the interface to the legally relevant part shall be clearly defined and documented. The declared software interface shall not be circumvented.

The manufacturer is responsible for respecting these constraints. Technical means (such as sealing) of preventing a program from circumventing the interface or programming hidden commands are not possible. The programmer of the legally relevant software part as well as the programmer of the legally non-relevant part should be provided with instructions concerning these requirements by the manufacturer.

A.2.1.2.c There shall be an unambiguous assignment of each command to all initiated functions or data changes in the legally relevant part of the software. Commands that communicate through the software interface shall be declared and documented. Only documented commands are allowed to be activated through the software interface. The manufacturer shall state the completeness of the documentation of commands.

A.2.1.2.d Where legally relevant software has been separated from non-relevant software, the legally relevant software shall have priority using the resources over non-relevant software. The measurement task (realized by the legally relevant software part) must not be delayed or blocked by other tasks.

The manufacturer is responsible for respecting these constraints. Technical means for preventing a legally non-relevant program from disturbing legally relevant functions shall be provided. The programmer of the legally

relevant software part as well as the programmer of the legally non-relevant part should be provided with instructions concerning these requirements by the manufacturer.

A.2.2 Shared indications

A display or printout may be employed for presenting both information from the legally relevant part of software and other information.

Software that realizes the indication of measurement values and other legally relevant information belongs to the legally relevant part.

A.2.3 Storage of data, transmission via communication systems

If measurement values will be used at a location different from that of the measurement or at a later stage than the moment of measurement, these possibly need to leave the measuring system or device and be stored or transmitted in an insecure environment before being used for legal purposes. In that case the following requirements apply:

A.2.3.1 The measurement value stored or transmitted shall be accompanied by all relevant information necessary for the future legally relevant use.

A.2.3.2 The data shall be protected by software means so as to guarantee the authenticity, integrity and, if necessary the correctness of the information concerning the time of measurement. The software that displays or further processes the measurement values and the accompanying data shall check the time of measurement, authenticity, and integrity of the data after having read them from the insecure storage or after having received them from an insecure transmission channel.

The memory device shall be fitted with a checking facility to ensure that if an irregularity is detected, the data shall be discarded or marked unusable.

Software modules that prepare data for storing or sending, or that check data after reading or receiving are considered part of the legally relevant software.

A.2.3.3 When transferring measurement values through an open network, it is necessary to apply cryptographic methods. Confidentiality keys employed for this purpose shall be kept secret and secured in the measuring instruments, electronic devices, or sub-assemblies involved. Means shall be provided whereby these keys can only be input or read if a seal is broken.

A.2.4 Transmission delay

The measurement shall not be inadmissibly influenced by a transmission delay.

A.2.5 Transmission interruption

If network services become unavailable, no measurement data shall be lost. The measurement process should be stopped to avoid the loss of measurement data.

A.2.6 Automatic storage

When, considering the application, data storage is required, measurement data must be stored automatically when the measurement is concluded, i.e. when the final value used for the legal purpose has been generated.

The storage device must have sufficient permanency to ensure that the data will not become corrupted under normal storage conditions. There shall be sufficient memory storage for any particular application.

When the final value used for the legal purpose results from a calculation, all data that are necessary for the calculation must be automatically stored with the final value.

A.2.7 Deleting of stored data

Stored data concerning a single transaction and not relevant to maintain for other purposes may be deleted on the condition that the transaction is settled.

Only after this condition is met and insufficient memory capacity is available for storage of successive data, it is permitted to delete memorized data when both the following conditions are met:

- the sequence of deletion of data will be in the same order as the recording order (FIFO) while the rules established for the particular application are respected;
- the required deletion will start either automatically or after a specific manual operation.

A.3 Software documentation

All program functions shall be explained in the documentation of the measuring system, including relevant data structures and software interfaces of the legally relevant part of the software that is implemented in the measuring instrument. All commands and their effects shall be described exhaustively in the software documentation.

Annex B
Typical methods for correction of the depressurization quantity for hydrogen CGF measuring systems

(Informative)

B.1 Evaluation of depressurized quantity

An example of a measuring system where hydrogen loss occurs due to depressurization is shown in Figure B.1.

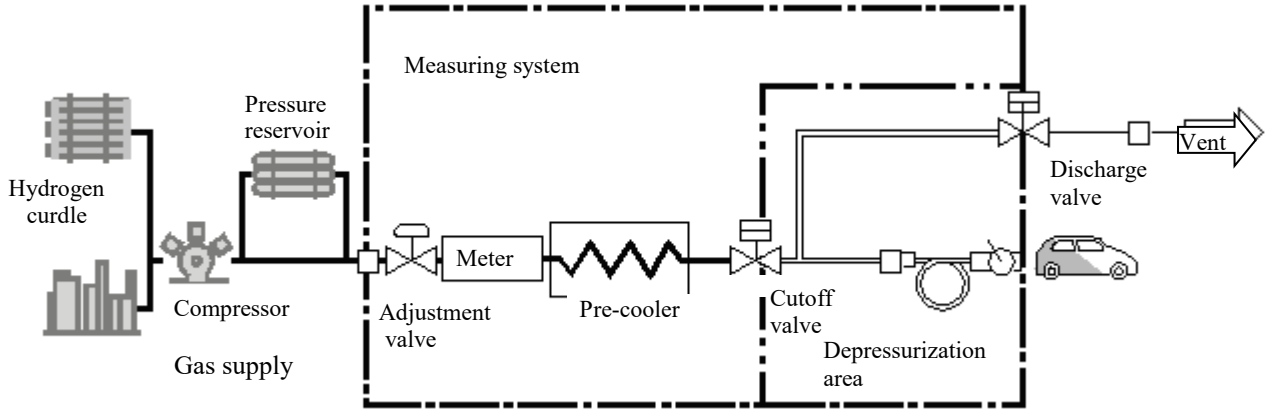

Note: The part surrounded by two-dot chain lines is the part to be considered as the area of hydrogen loss due to depressurization.

Figure B.1 - Schematic diagram of an example of a hydrogen dispenser

Table B.1 Methods to evaluate depressurized quantity

Method A	Evaluate the maximum value of the depressurized quantity as a specific value for each dispenser from the maximum hydrogen pressure and minimum temperature at the operating condition, and the volume of the depressurization area.	
Method B	Evaluate the depressurized quantity after each filling process completed;	
	B1	from the hydrogen temperature / pressure and the volume of the depressurization area.
	B2	by using a flowmeter mounted at the discharge valve.

Note 1: The volume of the depressurization area can be obtained either by calculation from the dimensions of the components of the depressurization area (the pipe length, the inner diameter of the pipe, the inner volume of the valves and so on), or by other kind of physical measurement.

Note 2: If method A is applied the correction value needs to be a settable parameter. This value of the parameter will be fixed (thus not changeable) when the system is installed.

B.2 Equation for estimation of depressurization quantity

For Method A and Method B1 in Table B.1, the depressurization quantity is obtained from the following formula.

$$C = M \sum \left(\frac{PV}{\mathrm{R} f T} \right)$$

Where,

C :	depressurization quantity value[g]
M :	molecular mass of hydrogen [g mol^{-1}]. The value 2.016 is applicable for measurements within the scope of this Recommendation.
Σ :	Summation for all depressurization area
P :	Operating pressure of hydrogen refueling station (Method A), or hydrogen pressure at the end of each refueling (Method B1) [MPa]
V :	Volume of depressurization area [cm^3]
R :	Gas constant [J $K^{-1}mol^{-1}$]. The value 8.314 46 is applicable for measurements within the scope of this Recommendation.
f :	Compressibility factor [none]
T :	Hydrogen temperature in the depressurization area at operating condition (Method A) or hydrogen temperature at the end of each refueling (Method B1) [K]

B.3 Correction for depressurization quantity

The hydrogen CGF measuring system will indicate a corrected value obtained by subtracting the depressurization quantity value from the meter indication at the end of the refueling. The accuracy should be within the applicable MPE (see 5.2.1).

Note: When Method A is used, the indication could be over-corrected resulting in financial loss of the station operator and poor metrological accuracy, while when using Method B, a higher accuracy can be expected.

Annex C
Bibliography

(Informative)

Ref.	Standards and reference documents	Description
[1]	OIML V 2-200:2007 including erratum 2010 and minor corrections 2012; 3rd Edition JCGM 200:2012	International Vocabulary of Metrology – Basic and General Concepts and Associated Terms (VIM). Vocabulary, prepared by a joint working group (JCGM) comprising by BIPM, IEC, IFCC, ISO, IUPAC, IUPAP, and OIML
[2]	OIML V 1:2013	International vocabulary of terms in legal metrology (VIML) (bilingual French-English) / Vocabulaire international des termes de métrologie légale (VIML)
[3]	OIML D 11:2013 *General requirements for measuring instruments - Environmental conditions*	Guidance document for establishing appropriate metrological performance testing requirements for environmental influence quantities that may affect the measuring instruments.
[4]	OIML G 1-100:2008 *Guide to the expression of Uncertainty in Measurement (GUM)*	Evaluation of measurement data - Guide to the expression of uncertainty in measurement
[5]	IEC 60068-2-1 Ed. 6.0 (2007-03) *Environmental testing* Part 2: *Test methods*- Section 1: Test A*: Cold*	Concerns exposure to low temperatures (cold) tests on both non-heat-dissipating and heat-dissipating specimens
[6]	IEC 60068-2-2 Ed 5.0 (2007-07) *Environmental testing* Part 2: *Test methods* – Section 2: Test B: *Dry heat*	Concerns exposure to high temperatures and low humidity (dry heath) tests on both non-heat-dissipating and heat-dissipating specimens and contains the following tests with gradual change of temperature: for non-heat-dissipating specimens, for heat-dissipating specimens and for heat-dissipating specimens powered throughout the test,
[7]	IEC 60068-2-30 Ed 3.0 (2005-08) *Environmental testing* Part 2-*Test methods* - Section 30 Test Db : *Damp heat, cyclic (12 + 12-hour cycle)*	Determines the suitability of components, equipment or other articles for use, transportation and storage under conditions of high humidity - combined with cyclic temperature changes and, in general, producing condensation on the surface of the specimen
[8]	IEC 60068-2-47 Ed 3.0 (2005-04) *Environmental testing* Part 2 *Test methods* - Section 47: *Mounting of specimens for vibration, impact and similar dynamic tests*	Provides methods of mounting components, and mounting requirements for equipment and other articles, for the families of dynamic tests in IEC 60068-2, that is impact (Test E), vibration (Test F) and acceleration, steady-state (Test G).
[9]	IEC 60068-2-64 Ed 2.0 (2008-04) *Environmental testing* Part 2: *Test methods*, Section 64: Test Fh: *Vibration, broad-band random and guidance*	Determines the adequacy of specimens to resist dynamic loads without unacceptable degradation of its functional and/or structural integrity when subjected to the specified random vibration test requirements.

Ref.	Standards and reference documents	Description
[10]	IEC 60068-3-1 Ed. 2.0 (2011-08) *Environmental testing* Part 3: *Supporting documentation and guidance* - Section 1: *Cold and dry heat tests*	Provides guidance regarding the performance of cold and dry heat tests.
[11]	IEC 60068-3-4 Ed. 1.0 (2001-08) *Environmental testing* Part 3: *Supporting documentation and guidance* - Section 4: *Damp heat tests*	The object of damp heat tests described is to determine the ability of products to withstand the stresses occurring in a high relative humidity environment, with or without condensation, and with special regard to variations of electrical and mechanical characteristics.
[12]	IEC 60068-3-8 Ed. 1.0 (2003) *Environmental testing* Part 3: *Supporting documentation and guidance* - Section 8: *Selecting amongst vibration tests*	Provides guidance for selecting amongst the IEC 60068-2 stationary vibration test methods Fc sinusoidal, Fh random and F(x) Mixed mode vibration.
[13]	IEC 60654-2 Ed. 1.0 (1979-01), with amendment 1 (1992-09) on Ed. 1.0 *Operating conditions for industrial-process measurement and control equipment* Part 2: *Power*	Provides the limiting values for power received by land-based and offshore industrial-process measurement and control systems or parts of systems during operation. Maintenance and repair conditions are not within the scope of this standard
[14]	IEC/TR 61000-2-1 Ed. 1.0 (1990-05) *Electromagnetic compatibility (EMC)* Part 2: *Environment* Section 1: *Description of the environment - Electromagnetic environment for low-frequency conducted disturbances and signalling in public power supply systems*	This publication has the status of a technical report, and provides information on the various types of disturbances that can be expected on public power supply systems. The following disturbance phenomena are considered: - harmonics - inter-harmonics - voltage fluctuations - voltage dips and short supply interruptions - voltage unbalance - mains signalling - power frequency variation - DC components
[15]	IEC 61000-4-1 Ed.3.0 (2006-10) Basic EMC Publication *Electromagnetic compatibility (EMC)* Part 4: *Testing and measurement techniques* Section 1: *Overview of IEC 61000-4 series*	Provides applicability assistance to the users and manufacturers of electrical and electronic equipment on EMC standards within the IEC 61000-4 series on testing and measurement techniques.
[16]	IEC 61000-4-2 Ed. 2.0 (2008-12) Basic EMC Publication *Electromagnetic compatibility (EMC)* Part 4: *Testing and measurement techniques* Section 2: *Electrostatic discharge immunity test.*	Provides the immunity requirements and test methods for electrical and electronic equipment subjected to static electricity discharges, from operators directly, and from any person to adjacent objects. It additionally defines ranges of test levels which relate to different environmental and installation conditions and establishes test procedures.
[17]	IEC 61000-4-3 consolidated Ed. 3.2 (2010-04) Basic EMC Publication *Electromagnetic compatibility (EMC)* Part 4: *Testing and measurement techniques* Section 3: *Radiated, radio-frequency, electromagnetic field immunity test*	Provides the immunity requirements of electrical and electronic equipment to radiated electromagnetic energy. It establishes test levels and the required test procedures. Establishes a common reference for evaluating the performance of electrical and electronic equipment when subjected to radio-frequency electromagnetic fields from any source.

Ref.	Standards and reference documents	Description
[18]	IEC 61000-4-4 Ed. 3.0 (2012-04) *Electromagnetic compatibility (EMC)* Part 4: *Testing and measurement techniques* Section 4: *Electrical fast transient/burst immunity test*	Establishes a common and reproducible reference for evaluating the immunity of electrical and electronic equipment when subjected to electrical fast transient/bursts on supply, signal, control and earth ports.
[19]	IEC 61000-4-5 Ed. 3.0 (2014-05) *Electromagnetic compatibility (EMC)* Part 4: *Testing and measurement techniques* Section 5: *Surge immunity test*	Provides the immunity requirements, test methods, and range of recommended test levels for electrical and electronic equipment to unidirectional surges caused by overvoltages from switching and lightning transients. Several test levels are defined which relate to different environment and installation conditions.
[20]	IEC 61000-4-6 Ed 4.0 (2013-10) *Electromagnetic compatibility (EMC)* Part 4: *Testing and measurement techniques* Section 6: *Immunity to conducted disturbances, induced by radio-frequency fields*	Provides the immunity requirements of electrical and electronic equipment to conducted electromagnetic disturbances originating from intended radio-frequency (RF) transmitters in the frequency range 9 kHz up to 80 MHz. Equipment not having at least one conducting cable (such as mains supply, signal line or earth connection), which can couple the equipment to the disturbing RF fields is excluded.
[21]	IEC 61000-4-11 Ed.2.0 (2004-03) *Electromagnetic compatibility (EMC)* Part 4: *Testing and measuring techniques* Section 11:*Voltage dips, short interruptions and voltage variations immunity tests*	Provides the immunity test methods and range of preferred test levels for electrical and electronic equipment connected to low-voltage power supply networks for voltage dips, short interruptions, and voltage variations. It applies to equipment having a rated input current not exceeding 16 A per phase, for connection to 50 Hz or 60 Hz AC networks. It does not apply equipment for connection to 400 Hz AC networks
[22]	IEC 61000-4-17 Consolidated Ed. 1.2 (2009-01) (incl. am. 1& am.2) *Electromagnetic compatibility (EMC) –* Part 4: *Testing and measurement techniques* Section 17: *Ripple on DC input power port immunity test*.	Provides test methods for immunity to ripple at the DC input power port of electrical or electronic equipment. This standard is applicable to low-voltage DC power ports of equipment supplied by external rectifier systems, or batteries which are being charged This test does not apply to equipment connected to battery charger systems incorporating switch mode converters.
[23]	IEC 61000-4-20 Ed 2.0 (2010-08) *Electromagnetic compatibility (EMC)* Part 4: *Testing and measurement techniques;* Section 20: *Emission and immunity testing in transverse electromagnetic (TEM) waveguides*	Provides radiated immunity test methods for electrical and electronic equipment using various types of transverse electromagnetic (TEM) waveguides. These types include open structures (for example, striplines and electromagnetic pulse simulators) and closed structures (for example, TEM cells).
[24]	IEC 61000-4-29 Ed. 1.0 (2000-08) *Electromagnetic compatibility (EMC) –* Part 4: *Testing and measuring techniques,* Section 29: *Voltage dips, short interruptions and voltage variations on DC input power port immunity tests*	Provides test methods for immunity to voltage dips, short interruptions and voltage variations at the DC input power ports of electrical or electronic equipment. This standard is applicable to low voltage DC power ports of equipment supplied by external DC networks.

Ref.	Standards and reference documents	Description
[25]	IEC 61000-6-2 Ed. 3.0 (2016-08) *Electromagnetic compatibility (EMC) –* Part 6 *Generic standards –* Section 2: *Immunity for industrial environments*	Defines the immunity performance requirements for electrical and electronic apparatus intended for use in industrial environments, both indoor and outdoor and for which no dedicated product or product-family immunity standard exists. This Standard also applies to apparatus which are battery operated and intended to be used in industrial locations
[26]	OIML D 31:2008	General requirements for software controlled measuring instruments