INTERNATIONAL
RECOMMENDATION

OIML R 111-1:2004

Weights of classes E_1, E_2, F_1, F_2, M_1, M_{1-2}, M_2, M_{2-3} and M_3

Part 1: Metrological and technical requirements

UPDATE

See also:

Amendment 2025 to R 111-1:2004 R 111-1:2004/Amendment:2025

INTERNATIONAL ORGANIZATION
OF LEGAL METROLOGY

INTERNATIONAL RECOMMENDATION

OIML R 111-1

Edition 2004 (E)

Weights of classes E_1, E_2, F_1, F_2, M_1, M_{1-2}, M_2, M_{2-3} and M_3

Part 1: Metrological and technical requirements

Poids des classes E_1, E_2, F_1, F_2, M_1, M_{1-2}, M_2, M_{2-3} et M_3

Partie 1: Exigences métrologiques et techniques

ORGANISATION INTERNATIONALE DE MÉTROLOGIE LÉGALE

INTERNATIONAL ORGANIZATION OF LEGAL METROLOGY

Contents

Foreword *3*

General **4**

1 Scope 4
2 Terminology 5
3 Symbols 8
4 Units and nominal values for weights 11

Metrological requirements **11**

5 Maximum permissible errors on verification 11

Technical requirements **13**

6 Shape 13
7 Construction 14
8 Material 15
9 Magnetism 16
10 Density 17
11 Surface conditions 18
12 Adjustment 19
13 Marking 20
14 Presentation 21

Metrological controls **22**

15 Submission to metrological controls 22
16 Control marking 23

Annex A Examples of different shapes and dimensions **25**

Annex B Test procedures for weights **28**

B.1 Introduction 28
B.2 Test sequence 28
B.3 Document review and visual inspection 28
B.4 Cleaning weights 29
B.5 Surface roughness 30
B.6 Magnetism 33
B.7 Density 42
B.8 Assignment of an OIML R 111 class to old and/or special weights 60

Annex C Calibration of a weight or weight set **61**

C.1 Scope 61
C.2 General requirements 61
C.3 Weighing designs 62
C.4 Weighing cycles 63
C.5 Data analysis 65
C.6 Uncertainty calculations 66

Annex D Statistical control **71**

D.1 Check standard 71
D.2 Precision of the balance 72

Annex E CIPM formula and an approximation formula **74**

E.1 CIPM formula 74
E.2 Constants 74
E.3 Approximation formula for air density 76

References **77**

Foreword

The International Organization of Legal Metrology (OIML) is a worldwide, intergovernmental organization whose primary aim is to harmonize the regulations and metrological controls applied by the national metrological services, or related organizations, of its Member States.

The two main categories of OIML publications are:

- **International Recommendations (OIML R)**, which are model regulations that establish the metrological characteristics required of certain measuring instruments and which specify methods and equipment for checking their conformity; the OIML Member States shall implement these Recommendations to the greatest possible extent;
- **International Documents (OIML D)**, which are informative in nature and intended to improve the work of the metrology services.

OIML Draft Recommendations and Documents are developed by technical committees or subcommittees which are formed by Member States. Certain international and regional institutions also participate on a consultation basis.

Cooperative agreements are established between OIML and certain institutions, such as ISO and IEC, with the objective of avoiding contradictory requirements; consequently, manufacturers and users of measuring instruments, test laboratories, etc. may apply simultaneously OIML publications and those of other institutions.

International Recommendations and International Documents are published in French (F) and English (E) and are subject to periodic revision.

This publication - OIML R 111-1, Edition 2004 (E) - was developed by TC 9/SC 3 *Weights*. It was directly sanctioned by the International Conference of Legal Metrology in 2004.

OIML Publications may be downloaded from the OIML web site in the form of PDF files. Additional information on OIML Publications may be obtained from the Organization's headquarters:

Bureau International de Métrologie Légale
11, rue Turgot - 75009 Paris - France
Telephone: 33 (0)1 48 78 12 82
Fax: 33 (0)1 42 82 17 27
E-mail: biml@oiml.org
Internet: www.oiml.org

Weights of classes E_1, E_2, F_1, F_2, M_1, M_{1-2}, M_2, M_{2-3} and M_3

General

1 SCOPE

1.1 This Recommendation contains technical (e.g. principal physical characteristics) and metrological requirements for weights used:

- As standards for the verification of weighing instruments;
- As standards for the verification or calibration of weights of a lower accuracy class;
- With weighing instruments.

1.2 Application

This Recommendation applies to weights with nominal values of mass from 1 mg to 5 000 kg in the E_1, E_2, F_1, F_2, M_1, M_{1-2}, M_2, M_{2-3} and M_3 accuracy classes.

1.3 Minimum accuracy class of weights

The accuracy class for weights used as standards for the verification of weights or weighing instruments should be in accordance with the requirements of the relevant OIML Recommendations.

1.3.1 The OIML weight classes are defined as follows:

Class E_1: Weights intended to ensure traceability between national mass standards (with values derived from the International Prototype of the kilogram) and weights of class E_2 and lower. Class E_1 weights or weight sets shall be accompanied by a calibration certificate (see 15.2.2.1).

Class E_2: Weights intended for use in the verification or calibration of class F_1 weights and for use with weighing instruments of special accuracy class I. Class E_2 weights or weight sets shall be accompanied by a calibration certificate (see 15.2.2.2). They may be used as class E_1 weights if they comply with the requirements for surface roughness, magnetic susceptibility and magnetization for class E_1 weights, and if their calibration certificate gives the appropriate data as specified in 15.2.2.1.

Class F_1: Weights intended for use in the verification or calibration of class F_2 weights and for use with weighing instruments of special accuracy class I and high accuracy class II.

Class F_2: Weights intended for use in the verification or calibration of class M_1 and possibly class M_2 weights. Also intended for use in important commercial transactions (e.g. precious metals and stones) on weighing instruments of high accuracy class II.

Class M_1: Weights intended for use in the verification or calibration of class M_2 weights, and for use with weighing instruments of medium accuracy class III.

Class M_2: Weights intended for use in the verification or calibration of class M_3 weights and for use in general commercial transactions and with weighing instruments of medium accuracy class III.

Class M_3: Weights intended for use with weighing instruments of medium accuracy class III and ordinary accuracy class IIII.

Classes M_{1-2} and M_{2-3}: Weights from 50 kg to 5 000 kg of lower accuracy intended for use with weighing instruments of medium accuracy class III.

Note: The error in a weight used for the verification of a weighing instrument shall not exceed 1/3 of the maximum permissible error for an instrument. These values are listed in section 3.7.1 of OIML R 76 *Nonautomatic Weighing Instruments* (1992).

2 TERMINOLOGY

The terminology used in this Recommendation conforms to the *International Vocabulary of Basic and General Terms in Metrology* (1993 edition) [1] and the *International Vocabulary of Terms in Legal Metrology* (2000 edition) [2]. In addition, for the purposes of this Recommendation, the following definitions apply.

2.1 Accuracy class

Class designation of a weight or weight set which meets certain metrological requirements intended to maintain the mass values within specified limits.

2.2 Balance

Instrument indicating apparent mass that is sensitive to the following forces:

$F_g = m \times g$	Gravity.
$F_b = V \times \rho_a \times g = \frac{m}{\rho} \rho_a \times g$	Air buoyancy equal to the weight of the displaced air.
$F_z = \mu_0 \iiint_V (\boldsymbol{M} + \chi \boldsymbol{H}) \frac{\partial \boldsymbol{H}}{\partial z} \mathrm{d}V$	Vertical component of the magnetic interaction between the weight and the balance and/or the environment.

H and M are vectors; z is the vertical cartesian coordinate.

If magnetic effects are negligible, i.e. the permanent magnetization (M) of the weight and the magnetic susceptibility (χ) are sufficiently small, and the balance is calibrated with reference weights of well known mass, the balance can be used to indicate the conventional mass, m_c, of a body under conventionally chosen conditions.

2.3 Calibration

Set of operations that establish, under specified conditions, the relationship between values of quantities indicated by a measuring instrument or measuring system, or values represented by a material measure or a reference material, and the corresponding values realized by standards.

Note 1: The result of a calibration permits either assignment of values of measurands to the indications or the determination of corrections with respect to indications.

Note 2: A calibration may also determine other metrological properties such as the effect of influence quantities.

Note 3: The result of a calibration may be recorded in a document, sometimes called calibration certificate or calibration report.

2.3.1 Calibration certificate (report)

Certificate issued only by authorized or accredited laboratories that record the results of a calibration.

2.4 Certificate of conformity

Document provided by the national responsible body indicating confidence that an identified weight or weight set, or samples thereof, is in conformity with the relevant requirements of this Recommendation (see *OIML Certificate System for Measuring Instruments*).

2.5 Check standard

Standard that is used in a statistical control process to provide a “check” to ensure that standards, measurement processes and results are within acceptable statistical limits.

2.6 Comparison

Method of measurement based on comparing the value of a quantity to be measured with a known value of the same quantity.

2.7 Conventional mass (also called the conventional value of mass)

Conventional value of the result of weighing in air, in accordance with OIML D 28 *Conventional value of the result of weighing in air* [3]. For a weight taken at a reference temperature (t_{ref}) of 20 °C, the conventional mass is the mass of a reference weight of a density (ρ_{ref}) of 8 000 kg m^{-3} which it balances in air of a reference density (ρ_0) of 1.2 kg m^{-3}.

2.8 Density of a body

Mass divided by volume, given by the formula $\rho = \frac{m}{V}$.

2.9 Magnetism

Effect that generates an attractive or repulsive force.

2.9.1 Magnetic dipole moment (m_d)

Parameter of a magnetic dipole. The magnetic field strength generated by a dipole, also the force between the dipole and a magnetized sample, is proportional to this dipole moment. The force between the dipole and a sample having a magnetic susceptibility is proportional to the square of the dipole moment.

2.9.2 Magnetic field strength (H)

Local magnetic intensity, generated by magnetic material, such as a permanent magnet, or by electrical circuits.

2.9.3 Magnetic force (F_1, F_2, F_a, F_b, F_{max} and F_z)

Force produced on magnetic or magnetically susceptible material by external magnetic fields.

2.9.4 Magnetic permeability (μ)

Measure of the ability of a medium to modify a magnetic field.

2.9.5 Magnetic constant (magnetic permeability of vacuum (μ_0))

$\mu_0 = 4\pi \times 10^{-7}$ NA^{-2}.

2.9.6 (Volume) magnetic susceptibility (χ)

Measure of the ability of a medium to modify a magnetic field. It is related to the magnetic permeability (μ) by the relation: $\mu / \mu_0 = 1 + \chi$. The quantity μ / μ_0 is sometimes referred to as the relative permeability, μ_r.

2.9.7 (Permanent) magnetization (M)

Parameter that specifies a magnetic state of material bodies such as weights, in the absence of an external magnetic field (most generally, magnetization is a vector whose magnitude and direction are not necessarily constant within the material). The magnetization of a body generates an inhomogeneous magnetic field in space and thus may produce magnetic forces on other materials.

2.10 Maximum permissible error (δm or mpe)

Maximum absolute value of the difference allowed by national regulation, between the measured conventional mass and the nominal value of a weight, as determined by corresponding reference weights.

2.11 Roughness parameter or R-parameter (R_a or R_z)

Parameter that describes the assessed roughness profile of a sample. The letter R is indicative of the type of assessed profile, in this case R for roughness profile. The assessed profile of a sample can be in terms of different profile types: a roughness profile or R-parameter, primary profile or P-parameter, a waviness profile or W-parameter. [4]

2.12 Sensitivity weight

Weight that is used to determine the sensitivity of a weighing instrument (see T.4.1 in OIML R 76-1).

2.13 Set of weights or weight set

Series or group of weights, usually presented in a case so arranged to make possible any weighing of all loads between the mass of the weight with the smallest nominal value and the sum of the masses of all weights of the series with a progression in which the mass of the smallest nominal value weight constitutes the smallest step series. The weights have similar metrological characteristics and the same or different nominal values as defined in 4.3 of this Recommendation, and belong to the same accuracy class.

2.14 Temperature (t)

In degrees Celsius, is related to the absolute thermodynamic temperature scale, called the Kelvin scale, by $t = T - 273.15$ K.

2.15 Test

Technical operation that consists of the determination of one or more characteristics or performance of a given product, material, equipment, organism, physical phenomenon, process or service according to a specified procedure. (Based on 13.1. Test, ISO/IEC Guide 2:1996 Standardization and Related Activities—General Vocabulary)[5]

2.16 Test weight (m_t)

Weight that is to be tested according to this Recommendation.

2.17 Type

Definite model of weights or weight set to which it conforms.

2.17.1 Type evaluation

Systematic examination and testing of the performance of a type of weights or weight sets against the documented requirements of this Recommendation, the results of which are contained in a test report.

2.17.2 Type approval

Process of making a decision by a responsible body, based on a review of a type evaluation test report for the type of weights or weight set and professional judgment, that the type is in conformity with the mandatory requirements of this Recommendation for legal applications.

2.18 Verification

All the operations carried out by an organ of the national service of legal metrology (or other legally authorized organization) having the object of ascertaining and confirming that the weight entirely satisfies the requirements of the regulations for verification. Verification includes both examination and stamping. (Adapted from VIML 2.4 and 2.13)

2.18.1 Initial verification

Series of tests and visual examinations carried out before the equipment/weight is put into service to determine whether a weight or weight set has been manufactured to replicate a given type and conforms to that type and to regulations, and that its metrological characteristics lie within the limits required for initial verification of copies of that type. If the weights or weight set pass all the tests and examinations, it is given legal character by its acceptance as evidenced by stamping and/or the issuing of a certificate of verification. (Adapted from OIML D 20 *Initial and subsequent verification of measuring instruments and processes* (1988))

2.18.2 Subsequent verification or in-service inspection

Series of tests and visual examinations, also carried out by an official of the legal metrology service (inspector), to ascertain whether the weights or weight set, having been in use for some time since the previous verification, continues to conform to, or again conforms to, regulations and maintains its metrological characteristics within the required limits. If the weights or weight set passes all tests and examinations, its legal character is either confirmed, or re-established by its acceptance as evidenced by stamping and/or the issuing of a certificate of verification. When sampling is used to verify a population of weights, all elements in the population will be deemed verified.

2.19 Weight

Material measure of mass, regulated in regard to its physical and metrological characteristics: shape, dimensions, material, surface quality, nominal value, density, magnetic properties and maximum permissible error.

2.20 Weight of a body (F_g)

Gravitational force with which the body is attracted by the earth. The word weight denotes a quantity of the same nature as a force: the weight of a body is the product of its mass and the acceleration due to gravity.

3 SYMBOLS

Symbol	Unit	Definition
A	m^2	area
B	T	magnetic induction in medium
B_E	T	gaussmeter reading of the ambient magnetic field with the weight absent
B_0	T	magnetic induction in vacuum
C	–	correction factor for air buoyancy
C_a	–	correction factor for air buoyancy for density of air during the weighing cycle in air
C_{al}	–	correction factor for air buoyancy for density of air during the weighing cycle in liquid
C_s	–	correction factor for air buoyancy for density of sensitivity weight
D	kg	difference of balance readings between minimum and maximum values from eccentricity test
d	kg	scale interval
F_1	N	average force calculated using the average mass change on the mass comparator for first set of readings
F_2	N	average force calculated using the average mass change on the mass comparator for second set of readings
F_a	N	average force used for the magnetic susceptibility
F_b	N	average force used for the magnetization
F_g	N	gravitational force
F_{max}	N	maximum force for magnetic susceptibility
F_z	N	magnetic force between a mass comparator and a weight in the vertical or z-direction
g	$m\ s^{-2}$	gravitational acceleration
h	mm or m	height
H	$A\ m^{-1}$	magnetizing field strength
H_{EZ}	$A\ m^{-1}$	vertical component of earth magnetic field strength
hr	%	relative humidity

Symbol	Unit	Definition
ΔI	kg	indication difference of the balance, where $\Delta I = I_t - I_r$
ΔI_a	kg	indication difference in air of the balance, where $\Delta I_a = I_{ta} - I_{ra}$
ΔI_l	kg	indication difference in liquid of the balance, where $\Delta I_l = I_{tl} - I_{rl}$
ΔI_s	kg	change in indication of balance due to sensitivity weight
I	kg	indication of the weighing instruments (scale division)
I_a	–	geometric correction factor [6]
I_b	–	geometric correction factor [6]
I_{dl}	–	indication of balance for displaced liquid difference
I_l	–	indication of balance for vessel and contained liquid
I_{l+t}	–	indication of balance for vessel containing liquid and weight
I_{ta}	–	indication of balance for test weight in air (after taring)
I_{tl}	–	indication of balance for test weight in liquid (after taring)
j	–	subscript for number of test weights or number of series of measurements
k	–	coverage factor, typically 2 or 3 (*Guide to the expression of uncertainty in measurement (GUM)* (1995))[7]
m	kg	mass of a rigid body (weight)
M	A m^{-1}	permanent magnetization (see also $\mu_0 M$)
M_v	kg mol^{-1}	molar mass of water (equation E.1)
M_a	kg mol^{-1}	molar mass of dry air
m_c	kg	conventional mass of the weight
m_{cr}	kg	conventional mass of the reference weight
m_{ct}	kg	conventional mass of the test weight
$\overline{\Delta m_c}$	–	average weighing difference observed between test and reference weight and ρ_{ref} density of the reference weight
m_d	A m^2	magnetic moment (of the magnets used in the susceptometer)
m_0	kg	mass, nominal value of the weight (e.g. 1 kg)
m_r	kg	mass of reference weight for comparisons with test weight, both in air or both submersed in liquid
m_{ra}	kg	mass of reference weight for comparison against test weight, both in air
m_{rl}	kg	mass of a combination of reference weights for comparison against test weight, standards in air, test weight in liquid
m_s	kg	mass of the sensitivity weight
m_t	kg	mass of the test weight
m_{wa}	kg	mass of weight in air
m_{wl}	kg	mass of weight in liquid
Δm	kg	mass difference, usually between test and reference weight
$\overline{\Delta m}$	kg	average value of a series of measurements, comprising a number of identical weighing cycles, or a number of series, having approximately the same standard deviation
Δm_c	kg	difference of conventional mass
n	_	subscript for number of measurement sequences
p	Pa or hPa	pressure
p_{sv}	Pa	saturation vapor pressure of moist air
R	J/(mol K)	molar gas constant
R_a	µm	mean height of roughness profile (R-parameter) (see clause 11)

Symbol	Unit	Definition
R_z	µm	maximum height of roughness profile (R-parameter) (see clause 11)
r	–	subscript for reference weight
s	kg	standard deviation
s	–	subscript for sensitivity weight
T	K	thermodynamic temperature using the International Temperature Scale of 1990 (ITS-90)
t	–	subscript for test weight
t	°C	temperature in degrees Celsius, where $t = T - 273.15$ K
t_{ref}	°C	reference temperature
U	kg	uncertainty, expanded uncertainty
u	kg	uncertainty, standard uncertainty
$u(m_r)$	kg	uncertainty of the reference weight
u_b	kg	uncertainty of air buoyancy correction
u_{ba}	kg	uncertainty due to the balance
$u_{ba}(\overline{\Delta m_c})$	kg	combined standard uncertainty of the balance
u_c	kg	combined standard uncertainty
u_d	kg	uncertainty due to the display resolution of a digital balance
u_E	kg	uncertainty due to eccentricity
u_{inst}	kg	uncertainty due to instability of the reference weight
u_{ma}	kg	uncertainty due to magnetism
u_s	kg	uncertainty due to the sensitivity of the balance
u_w	kg	uncertainty due to the weighing process
V	m^3	volume of a solid body (weight)
V_{rli}	m^3	volume of the i-th reference weight of a combination of weights
x_v	–	mole fraction of water vapor
Z	–	compressibility factor
Z_1	mm	distance from top of weight to center of magnet (Figure B.1)
Z_0	mm	distance from center of magnet to the bottom of weight (Figure B.1)
ρ_a	kg m^{-3}	density of moist air
ρ_0	kg m^{-3}	density of air as a reference value equal to 1.2 kg m^{-3}
ρ_r	kg m^{-3}	density of a reference weight with mass m_r
ρ_{ra}	kg m^{-3}	density of a reference weight with mass m_{ra}
ρ_{ref}	kg m^{-3}	reference density (i.e. 8 000 kg m^{-3})
ρ_{rl}	kg m^{-3}	density of a reference weight with mass m_{rl}
ρ_s	kg m^{-3}	density of the sensitivity weight
ρ_t	kg m^{-3}	density of the weight being tested
ρ_x	kg m^{-3}	density of alloy (x)
ρ_y	kg m^{-3}	density of alloy (y)
$\delta m/m_0$	–	maximum permissible relative error on the weights
μ	N A^{-2}	magnetic permeability
μ_r	–	relative magnetic permeability (μ/μ_0)
μ_0	N A^{-2}	magnetic constant (magnetic permeability of vacuum), $\mu_0 = 4\pi \times 10^{-7}$ N A^{-2}
$\mu_0 M$	T	magnetic polarization
χ	–	(volume) magnetic susceptibility

4 UNITS AND NOMINAL VALUES FOR WEIGHTS

4.1 Units

The units used are:

- For mass, the milligram (mg), the gram (g) and the kilogram (kg);
- For density, the kilogram per cubic meter (kg m^{-3}).

4.2 Nominal values

The nominal values of the mass for weights or weight sets shall be equal to 1×10^n kg, 2×10^n kg or 5×10^n kg, where "*n*" represents a positive or negative whole number or zero.

4.3 Weight sequence

4.3.1 A set of weights may consist of different sequences of nominal values. If weight sequences are used in a set of weights, the following individual weight sequences shall be used:

$(1; 1; 2; 5) \times 10^n$ kg;
$(1; 1; 1; 2; 5) \times 10^n$ kg;
$(1; 2; 2; 5) \times 10^n$ kg; or
$(1; 1; 2; 2; 5) \times 10^n$ kg

where "*n*" represents a positive or negative whole number or zero.

4.3.2 A set of weights may also comprise multiple weights, all of which have the same nominal value (e.g. 10 pieces or members of the set, each piece or member having a nominal capacity of 5×10^n kg).

Metrological requirements

5 MAXIMUM PERMISSIBLE ERRORS ON VERIFICATION

5.1 Maximum permissible errors on initial and subsequent verification or in-service inspection

5.1.1 Maximum permissible errors for initial verification of individual weights are given in Table 1 and relate to conventional mass.

5.1.2 Maximum permissible errors for subsequent verification or in-service verification are left to the discretion of each state. If, however, the maximum permissible errors allowed are greater than those in Table 1, the weight cannot be declared as belonging to the corresponding OIML class.

5.2 Expanded uncertainty

For each weight, the expanded uncertainty, U, for $k = 2$, of the conventional mass, shall be less than or equal to one-third of the maximum permissible error in Table 1.

$$U \leq 1/3\ \delta m \qquad (5.2\text{-}1)$$

5.3 Conventional mass

5.3.1 For each weight, the conventional mass, m_c (determined with an expanded uncertainty, U, according to 5.2) shall not differ from the nominal value of the weight, m_0, by more than the maximum permissible error, δm, minus the expanded uncertainty:

$$m_0 - (\delta m - U) \leq m_c \leq m_0 + (\delta m - U) \qquad (5.3\text{-}1)$$

5.3.2 For class E_1 and E_2 weights, which are always accompanied by certificates giving the appropriate data (specified in 15.2.1), the deviation from the nominal value, $m_c - m_0$, shall be taken into account by the user.

Table 1 Maximum permissible errors for weights (± δm in mg)

Nominal value*	Class E_1	Class E_2	Class F_1	Class F_2	Class M_1	Class M_{1-2}	Class M_2	Class M_{2-3}	Class M_3
5 000 kg			25 000	80 000	250 000	500 000	800 000	1 600 000	2 500 000
2 000 kg			10 000	30 000	100 000	200 000	300 000	600 000	1 000 000
1 000 kg		1 600	5 000	16 000	50 000	100 000	160 000	300 000	500 000
500 kg		800	2 500	8 000	25 000	50 000	80 000	160 000	250 000
200 kg		300	1 000	3 000	10 000	20 000	30 000	60 000	100 000
100 kg		160	500	1 600	5 000	10 000	16 000	30 000	50 000
50 kg	25	80	250	800	2 500	5 000	8 000	16 000	25 000
20 kg	10	30	100	300	1 000		3 000		10 000
10 kg	5.0	16	50	160	500		1 600		5 000
5 kg	2.5	8.0	25	80	250		800		2 500
2 kg	1.0	3.0	10	30	100		300		1 000
1 kg	0.5	1.6	5.0	16	50		160		500
500 g	0.25	0.8	2.5	8.0	25		80		250
200 g	0.10	0.3	1.0	3.0	10		30		100
100 g	0.05	0.16	0.5	1.6	5.0		16		50
50 g	0.03	0.10	0.3	1.0	3.0		10		30
20 g	0.025	0.08	0.25	0.8	2.5		8.0		25
10 g	0.020	0.06	0.20	0.6	2.0		6.0		20
5 g	0.016	0.05	0.16	0.5	1.6		5.0		16
2 g	0.012	0.04	0.12	0.4	1.2		4.0		12
1 g	0.010	0.03	0.10	0.3	1.0		3.0		10
500 mg	0.008	0.025	0.08	0.25	0.8		2.5		
200 mg	0.006	0.020	0.06	0.20	0.6		2.0		
100 mg	0.005	0.016	0.05	0.16	0.5		1.6		
50 mg	0.004	0.012	0.04	0.12	0.4				
20 mg	0.003	0.010	0.03	0.10	0.3				
10 mg	0.003	0.008	0.025	0.08	0.25				
5 mg	0.003	0.006	0.020	0.06	0.20				
2 mg	0.003	0.006	0.020	0.06	0.20				
1 mg	0.003	0.006	0.020	0.06	0.20				

* The nominal weight values in Table 1 specify the smallest and largest weight permitted in any class of R 111 and the maximum permissible errors and denominations shall not be extrapolated to higher or lower values. For example, the smallest nominal value for a weight in class M_2 is 100 mg while the largest is 5 000 kg. A 50 mg weight would not be accepted as an R 111 class M_2 weight and instead should meet class M_1 maximum permissible errors and other requirements (e.g. shape or markings) for that class of weight. Otherwise the weight cannot be described as complying with R 111.

Technical requirements

6 SHAPE

6.1 General

6.1.1 Weights shall have a simple geometrical shape to facilitate their manufacture. They shall have no sharp edges or corners to prevent their deterioration and no pronounced hollows to prevent deposits (i.e. of dust) on their surface.

6.1.2 Weights of a given weight set shall have the same shape, except for weights of 1 g or less.

6.2 Weights less than or equal to 1 g

6.2.1 Weights less than 1 g shall be flat polygonal sheets or wires, with shapes according to Table 2, which permit easy handling.

6.2.2 Weights of 1 g may be flat polygonal sheets or wires (see 6.3.1). The shape of weights not marked with their nominal value shall conform to the values given in Table 2.

Table 2 Shape of weights of 1 g or less

Nominal values	Polygonal sheets	Wires		
5, 50, 500 mg	Pentagon	Pentagon	or	5 segments
2, 20, 200 mg	Square	Square		2 segments
1, 10, 100, 1 000 mg	Triangle	Triangle		1 segment

6.2.3 A weight set may comprise more than one sequence of shapes, differing from one sequence to the other. In a series of sequences, however, a sequence of weights of a different shape shall not be inserted between two sequences of weights that have the same shape.

6.3 Weights of 1 g up to 50 kg

6.3.1 A 1 g weight may have either the shape of multiples of 1 g weights or the shape of sub-multiples of 1 g weights.

6.3.2 The weights of nominal values from 1 g to 50 kg may have the external dimensions shown in the Figures and Tables in Annex A.

6.3.2.1 These weights may also have a cylindrical or slightly tapered conical body (see example in Figure A.1). The height of the body shall be between 3/4 and 5/4 of its mean diameter.

6.3.2.2 These weights may also be provided with a lifting knob which has a height between 0.5 × and 1 × the mean diameter of the body.

6.3.3 In addition to the above shapes (6.3.2), weights of 5 kg to 50 kg may have a different shape suitable for their method of handling. Instead of a lifting knob, they may have rigid handling devices embodied with the weights, such as axles, handles, hooks or eyes, etc.

6.3.4 Class M weights with nominal values from 5 kg to 50 kg may also have the shape of rectangular parallelepipeds with rounded edges and a rigid handle. Typical examples of dimensions for these weights are shown in Figures A.2 and A.3.

6.4 Weights greater than or equal to 50 kg

6.4.1 Weights greater than or equal to 50 kg may have cylindrical, rectangular or other suitable shapes. The shape shall provide for safe storage and handling.

6.4.2 Weights greater than or equal to 50 kg may be provided with rigid handling devices, such as axles, handles, hooks, eyes, etc.

6.4.3 If class M weights are intended to run on a flat floor (or on rails), they shall be equipped with roller tracks or grooves of limited area.

7 CONSTRUCTION

7.1 Class E weights

7.1.1 Class E weights from 1 mg to 50 kg

Class E weights from 1 mg to 50 kg shall be solid and shall have no cavity open to the atmosphere. They shall consist of a single piece of material.

7.1.2 Class E_2 weights greater than 50 kg

7.1.2.1 Class E_2 weights greater than 50 kg may have an adjusting cavity. The volume of this cavity shall not exceed 1/1000 of the total volume of the weight. The cavity shall be sealable and shall be watertight and airtight (e.g. by means of a joint). A threaded plug with either a screwdriver slot or a handling device such as a knob, a handle, an eye, etc., shall close the adjusting cavity. The material of the plug shall be the same as the body of the weight and shall comply with the surface requirements of class E_2.

7.1.2.2 After initial adjustment, approximately 1/2 the total volume of the adjusting cavity shall be empty.

7.2 Class F weights

Class F weights may consist of one or more pieces manufactured from the same material.

7.2.1 Class F weights from 1 g to 50 kg

7.2.1.1 Class F weights from 1 g to 50 kg may have an adjusting cavity. The volume of this cavity shall not exceed 1/4 of the total volume of the weight. The cavity shall be closed either by means of a lifting knob or by any other suitable device.

7.2.1.2 After initial adjustment, approximately 1/2 of the total volume of the adjusting cavity shall be empty.

7.2.2 Class F weights greater than 50 kg

Class F weights greater than 50 kg may also consist of a box assembled from several pieces, closed and welded airtight and watertight. The content of the box may consist of a material different from that of the box and shall comply with the requirements for magnetic properties of class F_1 and F_2. The walls of the box shall be sufficiently rigid that deformations due to changes in ambient air pressure, handling, shocks, etc. cannot occur. The ratio between mass and volume shall comply with the density requirements of Table 5.

7.2.2.1 Class F weights greater than 50 kg may have an adjusting cavity. The volume of this cavity shall not exceed 1/20 of the total volume of the weight. The adjusting cavity shall be sealable and shall be watertight and airtight (e.g. by means of a joint). A threaded plug with either a screwdriver slot or a handling device such as a knob, a handle, an eye, etc., shall close the cavity.

7.2.2.2 After initial adjustment, approximately 1/2 of the total volume of the adjusting cavity shall be empty.

7.3 Class M weights

7.3.1 Class M_1, M_2 and M_3 weights from 1 g to 50 kg

7.3.1.1 Class M_1, M_2 and M_3 weights from 1 g to 10 g shall be solid, without an adjusting cavity. For class M_1, M_2 and M_3 weights from 20 g to 50 g an adjusting cavity is optional. Class M_1, M_2 and M_3 weights from 100 g to 50 kg shall have an adjusting cavity. However, the adjusting cavity is optional for class M_1 and M_2 weights from 20 g to 200 g that are made of stainless steel. The adjusting cavity shall be designed to prevent the accumulation of foreign matter or debris, to permit a secure cavity closure and to allow the cavity to be opened for additional adjustments. The volume of the adjusting cavity shall not be greater than 1/4 of the total volume of the weight.

7.3.1.2 After initial adjustment, approximately 1/2 of the total volume of the adjusting cavity shall be empty.

7.3.2 Class M_1, M_2 and M_3 weights from 100 g to 50 kg of the cylindrical type (see Figure A.1) shall have an adjusting cavity coaxial with the vertical axis of the weight, opening on the upper face of the knob and including a widening of the diameter at the entrance. The cavity shall be closed either by a threaded plug with a screwdriver slot (see Figure A.1, variant 1) or by a disc with a central handling hole (see Figure A.1, variant 3). The plug or disc shall be made of brass or of another appropriate metallic material and shall be sealed by a lead plug or similar material driven into an internal circular groove provided in the widened portion of the diameter.

7.3.3 Class M_1, M_2 and M_3 weights from 5 kg to 50 kg with the rectangular parallelepiped shape shall have an adjusting cavity either formed by the inside of the tubular handle, or, if the handle is solid, an adjusting cavity shall be cast within one of the uprights of the weight, opening on the side or the top face of the weight (see Figures A.2 and A.3).

7.3.3.1 If the adjusting cavity is in the tubular handle (see Figure A.2), the cavity shall be closed either by a threaded plug with a screwdriver slot or by a disc with a central handling hole. The plug or disc shall be made of brass or another appropriate metallic material and shall be sealed by a lead plug (or similar material) driven into an internal circular groove or into the threads of the tube.

7.3.3.2 If the adjusting cavity is cast within the upright and opens on the side or the top face of the upright (see Figure A.3), the cavity shall be closed by a plate made of soft steel or of another appropriate material, sealed by a lead plug or similar material driven into a housing having a conical section.

7.3.4 Class M weights greater than or equal to 50 kg

The weights shall not have any cavities that may cause rapid accumulation of dust or debris.

7.3.4.1 The weights shall include one or more adjusting cavities. The total volume of all adjusting cavities shall not be greater than 1/10 of the total volume of the weight. The cavities shall be sealable and shall be watertight and airtight (e.g. by means of a joint). The cavities shall be sealable using a threaded plug with either a screwdriver slot or a handling device (e.g. a knob or handle).

7.3.4.2 After initial adjustment, at least 1/3 of the total volume of the adjusting cavity shall be empty.

8 MATERIAL

8.1 General

The weights shall be corrosion resistant. The quality of the material shall be such that the change in the mass of the weights shall be negligible in relation to the maximum errors permitted in their accuracy class (see Table 1) under normal conditions of use and the purpose for which they are being used.

8.2 Class E_1 and E_2 weights

8.2.1 For weights equal to or greater than 1 g, the hardness of this material and its resistance to wear shall be similar to or better than that of austenitic stainless steel.

8.3 Class F weights

The surface of class F weights greater than or equal to 1 g may be treated with a suitable metallic coating in order to improve their corrosion resistance and hardness.

8.3.1 For class F weights greater than or equal to 1 g, the hardness and brittleness of the materials used shall be at least equal to that of drawn brass.

8.3.2 For class F weights greater than or equal to 50 kg, the hardness and brittleness of the materials used for the whole body or for the external surfaces shall be at least equal to that of stainless steel.

8.4 Class M_1, M_2 and M_3 weights of 50 kg or less

The surface of weights equal to or greater than 1 g may be treated with a suitable coating in order to improve their corrosion resistance or hardness.

8.4.1 Class M weights less than 1 g shall be made of material that is sufficiently resistant to corrosion and oxidization.

8.4.2 Cylindrical class M_1 weights below 5 kg and class M_2 and M_3 weights below 100 g shall be made of brass or a material whose hardness and resistance to corrosion is similar or better than that of brass. Other cylindrical class M_1, M_2 and M_3 weights of 50 kg or less shall be made of grey cast iron or of another material whose brittleness and resistance to corrosion is similar or better than that of grey cast iron.

8.4.3 Weights with a rectangular parallelepiped shape from 5 kg to 50 kg shall be made of a material that has a resistance to corrosion that is at least equal to that of grey cast iron. Its brittleness shall not exceed that of grey cast iron.

8.4.4 The handles of rectangular parallelepiped weights shall be made of seamless steel tube or shall be cast iron, integral with the body of the weight.

8.5 Class M weights greater than 50 kg

8.5.1 The surface of the weights may be treated with a suitable coating in order to improve their corrosion resistance. This coating shall withstand shocks and outdoor weather conditions.

8.5.2 The weights shall be made of one or more materials that have a resistance to corrosion equal to or better than that of grey cast iron.

8.5.3 The material shall be of such hardness and strength that it withstands the loads and shocks that will occur under normal conditions of use.

8.5.4 The handles of rectangular parallelepiped weights shall be made of seamless steel tube or shall be cast iron, integral with the body of the weight.

9 MAGNETISM

9.1 Limits of polarization

The magnetization, M, expressed in terms of the polarization, $\mu_0 M$, should not exceed the values given in Table 3.

Table 3 Maximum polarization, $\mu_0 M$, (µT)

Weight class	E_1	E_2	F_1	F_2	M_1	M_{1-2}	M_2	M_{2-3}	M_3
Maximum polarization, $\mu_0 M$, (µT)	2.5	8	25	80	250	500	800	1 600	2 500

9.2 Limits of magnetic susceptibility

The susceptibility of a weight should not exceed the values given in Table 4.

Table 4 Maximum susceptibility, χ

Weight class	E_1	E_2	F_1	F_2
$m \leq 1$ g	0.25	0.9	10	-
2 g $\leq m \leq$ 10 g	0.06	0.18	0.7	4
20 g $\leq m$	0.02	0.07	0.2	0.8

9.3 If the values of all local measurements of magnetization and susceptibility are less than these limits, then it may be assumed that the uncertainty components due to the magnetism of the weight are negligible. The maximum permanent magnetization and magnetic susceptibilities given in Tables 3 and 4 are such that, at magnetic fields and magnetic field gradients possibly present on balance pans, they produce a change of the conventional mass of less than 1/10 of the maximum permissible error of the test weight [8] [9].

10 DENSITY

10.1 General

The density of the material used for weights is specified in Table 5 and shall be such that a deviation of 10 % from the specified air density (1.2 kg m^{-3}) does not produce an error exceeding one-quarter of the absolute value of the maximum permissible error given in Table 1.

Table 5 Minimum and maximum limits for density (ρ_{min}, ρ_{max})

Nominal value	ρ_{min}, ρ_{max} (10^3 kg m^{-3})							
	Class of weight (for class M_3, no value is specified)							
	E_1	E_2	F_1	F_2	M_1	M_{1-2}	M_2	M_{2-3}
≥ 100 g	7.934 – 8.067	7.81 – 8.21	7.39 – 8.73	6.4 – 10.7	≥ 4.4	> 3.0	≥ 2.3	≥ 1.5
50 g	7.92 – 8.08	7.74 – 8.28	7.27 – 8.89	6.0 – 12.0	≥ 4.0			
20 g	7.84 – 8.17	7.50 – 8.57	6.6 – 10.1	4.8 – 24.0	≥ 2.6			
10 g	7.74 – 8.28	7.27 – 8.89	6.0 – 12.0	≥ 4.0	≥ 2.0			
5 g	7.62 – 8.42	6.9 – 9.6	5.3 – 16.0	≥ 3.0				
2 g	7.27 – 8.89	6.0 – 12.0	≥ 4.0	≥ 2.0				
1 g	6.9 – 9.6	5.3 – 16.0	≥ 3.0					
500 mg	6.3 – 10.9	≥ 4.4	≥ 2.2					
200 mg	5.3 – 16.0	≥ 3.0						
100 mg	≥ 4.4							
50 mg	≥ 3.4							
20 mg	≥ 2.3							

Note 1: Rule relating to the density of weights. Let $\delta m/m_0$ be the value of the maximum permissible relative error on the weights. The density, ρ, of the weight shall satisfy the following conditions:

$$8\,000\ \text{kg m}^{-3} \times \frac{1}{1+10^5\left(\dfrac{\delta m/m_0}{6}\right)} \le \rho \le 8\,000\ \text{kg m}^{-3} \times \frac{1}{1-10^5\left(\dfrac{\delta m/m_0}{6}\right)} \quad \text{if} \quad \delta m/m_0 < 6\times10^{-5} \qquad (10.1\text{-}1)$$

$$8\,000\ \text{kg m}^{-3} \times \frac{1}{1+10^5\left(\dfrac{\delta m/m_0}{6}\right)} \le \rho \quad \text{if} \quad \delta m/m_0 \ge 6\times10^{-5} \qquad (10.1\text{-}2)$$

Note 2: Independent of the requirements concerning the density of the weights, it is desirable to obtain, particularly for reference weights or those of a high nominal value, a density of 8 000 kg m^{-3}. For example, a cast iron body may be used, which incorporates a special cavity in which a lead core may be cast, with a mass of approximately 30 % of the total nominal mass of the standard.

10.2 Corrections for air density deviation

10.2.1 If the air density, ρ_a, deviates from ρ_0 = 1.2 kg m^{-3} by more than ± 10 % and the test weight density, ρ_t, deviates from the reference weight density, ρ_r, the conventional mass may be corrected by the term C as follows:

$$m_{ct} = m_{cr}(1+C) + \overline{\Delta m_c} \qquad (10.2\text{-}1)$$

with:

$$C = (\rho_a - \rho_0)\left[\frac{1}{\rho_t} - \frac{1}{\rho_r}\right] \qquad (10.2\text{-}2)$$

where: $\overline{\Delta m_c}$ is the average weighing difference observed between the test and reference weights;

ρ_r is the density of the reference weight; and

m_{ct} and m_{cr} are the conventional masses of the test and reference weights, respectively.

10.2.2 Weights used for the calibration/verification of balances

Altitude and corresponding changes in air density can affect the measurement error when using the conventional mass of weights; therefore, the buoyancy correction from 10.2.1 shall be used, which requires the density of the weight to be known. If class E weights are to be used above 330 m, the density of the weights shall be provided along with their associated uncertainty. For class F_1, the same is true above 800 m. Otherwise, the manufacturer shall take the lowered buoyancy effect at higher altitude into consideration when specifying the weight class for standards of conventional mass.

11 SURFACE CONDITIONS

11.1 General

Under normal conditions of use, the surface qualities shall be such that any alteration of the mass of the weights is negligible with respect to the maximum permissible error.

11.1.1 The surface of the weights (including the base and corners) shall be smooth and the edges shall be rounded.

11.1.2 The surface of class E and F weights shall not be porous and shall present a glossy appearance when visually examined. A visual examination may suffice except in case of doubt or dispute. In this case, the values given in Table 6 shall be used. The maximum surface roughness permitted for weights greater than 50 kg shall be twice the values specified in Table 6.

Table 6 Maximum values of surface roughness

Class	E_1	E_2	F_1	F_2
R_z (µm)	0.5	1	2	5
R_a (µm)	0.1	0.2	0.4	1

11.1.3 The surface of class M_1, M_2 and M_3 cylindrical weights from 1 g to 50 kg shall be smooth and shall not be porous when visually examined. The finish of class M_1, M_2 and M_3 cast weights from 100 g to 50 kg and all class M weights greater than 50 kg shall be similar to that of grey cast iron carefully cast in a fine sand mould. This may be obtained by appropriate surface protection methods.

12 ADJUSTMENT

A weight of given nominal value shall be adjusted in such a way that the conventional mass of the result of weighing this weight in air is equal to the given nominal value, within the limits of the maximum permissible errors fixed for the accuracy class to which the weight belongs. The uncertainty requirements in 5.3.1 shall be applied.

12.1 Class E weights

Weights shall be adjusted by abrasion, grinding or any other appropriate method. The surface requirements shall be met at the end of the process. Weights greater than 50 kg with an adjusting cavity may be adjusted with the same material from which they are made.

12.2 Class F weights

Solid weights shall be adjusted by abrasion, grinding or any other appropriate method that does not alter the surface. Weights with adjusting cavities shall be adjusted with the same material from which they are made or with stainless steel, brass, tin, molybdenum or tungsten.

12.3 Class M weights

12.3.1 Thin sheet and wire weights from 1 mg to 1 g shall be adjusted by cutting, abrasion or grinding.

12.3.2 Cylindrical weights which do not have cavities shall be adjusted by grinding.

12.3.3 Weights which have an adjusting capacity shall be adjusted by adding or removing dense, metallic material such as lead shot. If no more material can be removed, they may be adjusted by grinding.

12.4 Reference conditions

The reference conditions applicable to the adjustment of standard weights are as follows:

- Standard reference density: 8 000 kg m^{-3};
- Ambient air density: 1.2 kg m^{-3}; and
- Equilibrium in air at 20 °C, without correction for air buoyancy.

13 MARKING

13.1 General

Except class E weights and those weights of 1 g described in 6.2.2, weights of 1 g and multiples thereof shall be marked clearly to indicate their nominal value provided that the surface quality and stability of the weight are not affected by the markings or by the process used to mark the weight.

13.1.1 The numerals indicating the nominal values of the mass of the weights shall represent:

- Kilogram for masses of 1 kg and above; or
- Gram for masses from 1 g to 500 g.

13.1.2 Duplicate or triplicate weights in a set shall be clearly distinguished by one or two asterisks or points on the center of the surface, except for wire weights, which shall be distinguished by one or two hooks.

13.2 Class E weights

The class shall be indicated on the cover of the case (see 14.1) for class E weights. A class E weight should not be marked unless the markings are to distinguish it from another class E weight and provided that the surface quality and stability of the weight are not affected by the markings or by the process used to mark it. The maximum number of user markings is given in Table 7.

Class E_2 weights may bear an off-center point on the top surface to distinguish them from class E_1 weights.

13.3 Class F weights

Weights equal to or greater than 1 g shall bear, by burnishing or engraving, the indication of their nominal value expressed in accordance with 13.1 (not followed by the name or symbol of the unit).

13.3.1 Weights of class F_1 shall not bear any class reference.

13.3.2 Weights of class F_2 equal to or greater than 1 g shall bear their reference class in the form "F" together with the indication of their nominal value.

13.4 Class M_1, M_2 and M_3 weights

13.4.1 Rectangular weights from 5 kg to 5 000 kg shall bear the nominal value of the weight, followed by the symbol "kg" in hollow or relief on the body of the weight, as shown in Figures A.2 and A.3.

13.4.2 Cylindrical weights from 1 g to 5 000 kg shall indicate the nominal value of the weight, followed by the symbol "g" or "kg", in hollow or relief on the knob, as shown in Figure A.1. On cylindrical weights from 500 g to 5 000 kg, the indication may be reproduced on the cylindrical surface of the body of the weight.

13.4.3 Class M_1 weights shall bear the sign "M_1" or "M", in hollow or relief, together with the indication of the nominal value in the position shown in Figures A.2 and A.3. M_1 weights of rectangular shape may bear the manufacturer's mark in hollow or in relief on the center portion of the weights, as shown in Figures A.2 and A.3.

13.4.4 Class M_2 rectangular weights shall bear an indication of the nominal value, and may also bear the sign "M_2" in hollow or relief as shown in Figures A.2 and A.3.

13.4.5 Class M_3 rectangular weights shall bear the sign "M_3" or "X", in hollow or relief, together with the indication of the nominal value in the position shown in Figures A.2 and A.3.

13.4.6 Class M_2 and M_3 weights (except the wire weights) may bear the manufacturer's mark in hollow or relief:

- On the center portion of rectangular weights;
- On the upper face of the knob of cylindrical weights; or
- On the upper face of the cylinder for class M_3 cylindrical weights which are fitted with a handle,

as shown in Figures A.1, A.2 and A.3.

13.4.7 Class M_3 weights equal to or greater than 50 kg

The weight shall bear the nominal value in numerals followed by the unit symbol.

13.5 Weights of classes M_{1-2} and M_{2-3}

Weights of class M_{1-2} shall bear the sign "M_{1-2}" and those of class M_{2-3} shall bear the sign "M_{2-3}" in hollow or relief, together with the nominal value followed by the symbol "kg". Weights of the classes M_{1-2} and M_{2-3} may bear the manufacturer's mark in hollow or relief on the upper face of the surface and of similar size to that shown in Figures A.1, A.2 or A.3 for other class M weights.

13.6 User marking

It is good practice for a user to clearly identify individual weights as it helps to link a weight to its calibration certificate or verification document. The acceptable maximum values for user markings are given in Table 7.

Table 7 Maximum number of user markings

Class	Nominal value	Height of lettering	Maximum number of signs, numerals, or letters
E, F, M_1 and M_2	< 1 g	1 mm	2
E_1	≥ 1 g	2 mm	3
E_2	≥ 1 g	3 mm	5
F_1 to M_2	1 g to 100 g	3 mm	5
F_1 to M_2	200 g to 10 kg	5 mm	5
F_1 to M_2	≥ 20 kg	7 mm	5

The user markings shall consist of signs, numbers or letters, such that there is no confusion with any indication of nominal value or class.

14 PRESENTATION

14.1 General

Except for weights of classes M_{1-2}, M_2, M_{2-3} and M_3, weights shall be presented in accordance with the following requirements.

14.1.1 The lid of the case that contains the weights shall be marked to indicate their class in the form "E_1", "E_2", "F_1", "F_2" or "M_1".

14.1.2 Weights belonging to the same set shall be of the same accuracy class.

14.2 Class E and F weights

14.2.1 Individual weights and weight sets shall be protected against deterioration or damage due to shock or vibration. They shall be contained in cases made of wood, plastic, or any suitable material that has individual cavities.

14.2.2 Means of handling class E and F weights should be of such a construction that it does not scratch or change the weight surface.

14.3 Class M_1 weights

14.3.1 Cylindrical weights of class M_1 up to and including 500 g (individual or in sets), shall be contained in a case with individual cavities.

14.3.2 Thin sheet and wire weights shall be contained in cases that have individual cavities; the class reference (M_1) shall be inscribed on the cover of the case.

Metrological controls

15 SUBMISSION TO METROLOGICAL CONTROLS

In a country where weights are subject to state metrological controls, these controls may, depending on national legislation, comprise one or more of the following: type approval, calibration, re-calibration, verification, initial verification and subsequent verification. Table 8 gives guidance for determining which tests should be performed during which stage of the evaluation.

Table 8 Guidance for determining which tests shall be performed for type approval and suggested tests for initial verification and subsequent verification

Test	Density ρ			Surface roughness			Magnetic susceptibility χ			Permanent magnetization M			Conventional mass m_0		
Class	**E**	**F**	**M**	**E**	**F**	**M**	**E**	**F**	**M**	**E**	**F**	**M**	**E**	**F**	**M**
TA	✔	✔	✔	✔	✔	✔	✔	✔		✔	✔	✔	✔	✔	✔
IV	✔+			V	V	V	✔	✔		✔	✔	✔	✔	✔	✔
SV				V	V	V				*	*	*	✔	✔	✔

Legend: TA Type approval

IV Initial verification that is performed when the weight is first put into service

SV Subsequent or periodic verification

▭ Test not applicable

V Visual inspection only

✔ Testing required

* In case of doubt, permanent magnetization of a weight can be tested during subsequent verification

\+ Applies only for class E_1, not E_2

15.1 Type approval

15.1.1 Each manufacturer or authorized representative may submit a model or type of the weights intended for manufacture to the responsible body to ascertain that the model or type conforms with the statutory requirements. The mandatory test procedures are given in Annexes B and C of this Recommendation. For type approval, the mandatory test report format is given R 111-2. Table 8 gives the mandatory tests for type approval.

15.1.2 An approved model or type shall not be modified without special authorization once it has received type approval (see OIML B 3 *OIML Certificate System for Measuring Instruments*).

15.2 Calibration and verification

Calibration and verification of weights or weight sets shall be the responsibility of the national responsible body or user depending on national legislation and the intended use. Calibration and verification certificates shall be issued only by authorized or accredited laboratories. Traceability to national standards shall be maintained.

15.2.1 Calibration and verification certificates

A calibration or verification certificate shall state, as a minimum: the conventional mass of each weight, m_c, an indication of whether a weight has been adjusted prior to calibration, its expanded uncertainty, U, and the value of the coverage factor, k.

15.2.2 Class E weights shall be accompanied by a calibration certificate.

15.2.2.1 The certificate for class E_1 weights shall state, as a minimum, the values of conventional mass, m_c, the expanded uncertainty, U, and the coverage factor, k, and the density or volume for each weight. In addition, the certificate shall state if the density or volume was measured or estimated.

15.2.2.2 The certificate for class E_2 weights shall state, as a minimum, the following information:

a) The values of conventional mass, m_c, of each weight, the expanded uncertainty, U, and the coverage factor, k; or

b) The information required for calibration certificates for class E_1 weights (under the conditions of 1.3.1.a).

15.3 Re-calibration, initial and subsequent verification

15.3.1 Table 8 gives the suggested tests for initial and subsequent verification. The categories of weights that are subject to calibration or initial verification should also be subject to either re-calibration or subsequent verification, making it possible to verify that they have maintained their metrological properties. Any weights found defective at the time of re-calibration or subsequent verification shall be discarded or readjusted.

15.3.2 For subsequent verification, as a minimum, the weights shall be visually inspected for design and surface conditions and the mass checked against its certificate and OIML Certificate of Conformity.

16 CONTROL MARKING

16.1 General

Control marks are not required on weights when a calibration certificate is issued.

16.2 Class E weights

16.2.1 Control marks may be affixed to the case.

16.2.2 A calibration certificate shall be given by the metrological authorities (e.g. accredited calibration services or laboratories) for each weight or weight sets.

16.3 Class F weights

16.3.1 Class F_1 weights

If the weights are subject to metrological controls, the marks of these controls shall be affixed on the case containing the weights.

16.3.2 Class F_2 weights

If cylindrical F_2 weights are subject to metrological controls, the appropriate control marks shall be affixed to the seal of the adjusting cavity. For weights without an adjusting cavity, the control marks shall be affixed to their base or to the case containing the weights.

16.4 Class M weights

16.4.1 If class M_1, M_2 and M_3 weights are subject to metrological controls, the appropriate control marks shall be affixed to the seal of the adjusting cavity. For weights without an adjusting cavity, the control marks shall be affixed to their base.

16.4.2 If thin plate and wire class M_1 weights are subject to metrological controls, the appropriate control marks shall be affixed to the case.

Annex A
Examples of different shapes and dimensions

Figure A.1 Examples of cylindrical weights

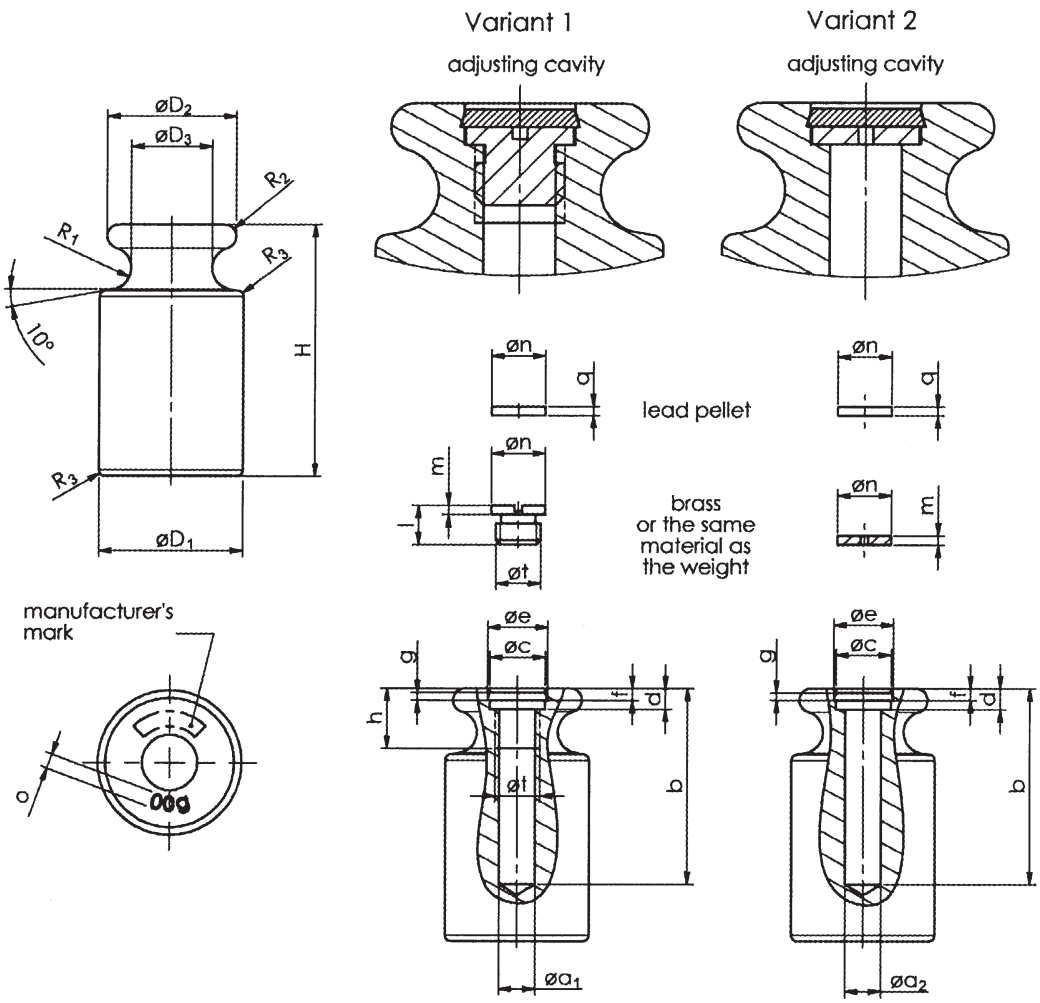

Annex A. Examples of different shapes and dimensions

A.1 Table of dimensions (in millimeters)

Nominal value	D_1	D_2	D_3	H	R_1	R_2	R_3	o	a_1	a_2	b①	c	d	e	f	g	h	l	m	n	q	t
1 g	6	5,5	3	DEPENDING ON MATERIAL	0,9	0,5	0,5	1	without adjusting cavity													
2 g	6	5,5	3		0,9	0,5	0,5	1														
5 g	8	7	4,5		1,25	0,7	0,5	1														
10 g	10	9	6		1,5	0,8	0,5	1														
20 g	13	11,5	7,5		1,8	1	0,5	1,5														
50 g	18	16	10		2,5	1,5	1	2														
20 g	13	11,5	7,5		1,8	1	0,5	1,5	3,5	3	18	5,5	2,5	6,5	1,5	1	9	5	1	5	1	M4 x 0,5
50 g	18	16	10		2,5	1,5	1	2	5,5	4,5	25	7,5	3,5	9	2	1	10	5	1,5	7	1,5	M6 x 0,5
100 g	22	20	13		3,5	2	1	2	5,5	4,5	30	7,5	3,5	9	2	1	10	5	1,5	7	1,5	M6 x 0,5
200 g	28	25	16		4	2,25	1,5	3,2	6,9	7	40	10,5	4,5	12	2,5	1,5	15	8	2	10	2	M8 x 1
500 g	38	34	22		5,5	3	1,5	3,2	6,9	7	50	10,5	4,5	12	2,5	1,5	15	8	2	10	2	M8 x 1
1 kg	48	43	27		7	4	2	5	12,4	12	65	18,5	7	20	4	2,5	20	13	3	18	3	M14 x 1,5
2 kg	60	54	36		9	5	2	5	12,4	12	80	18,5	7	20	4	2,5	20	13	3	18	3	M14 x 1,5
5 kg	80	72	46		12	6,5	2	10	18,4	18	120	24,5	8	26,5	4	2,5	35	18	4	24	3	M20 x 1,5
10 kg	100	90	58		15	8,5	3	10	18,4	18	160	24,5	8	26,5	4	2,5	35	18	4	24	3	M20 x 1,5
20 kg	128	112	74		18	11	3	10	18,4	18	160	24,5	8	26,5	4	2,5	35	18	4	24	3	M20 x 1,5

① The depth of the adjusting cavities is given only as an indication

Figure A.2 Examples of rectangular bar weights (Type 1)

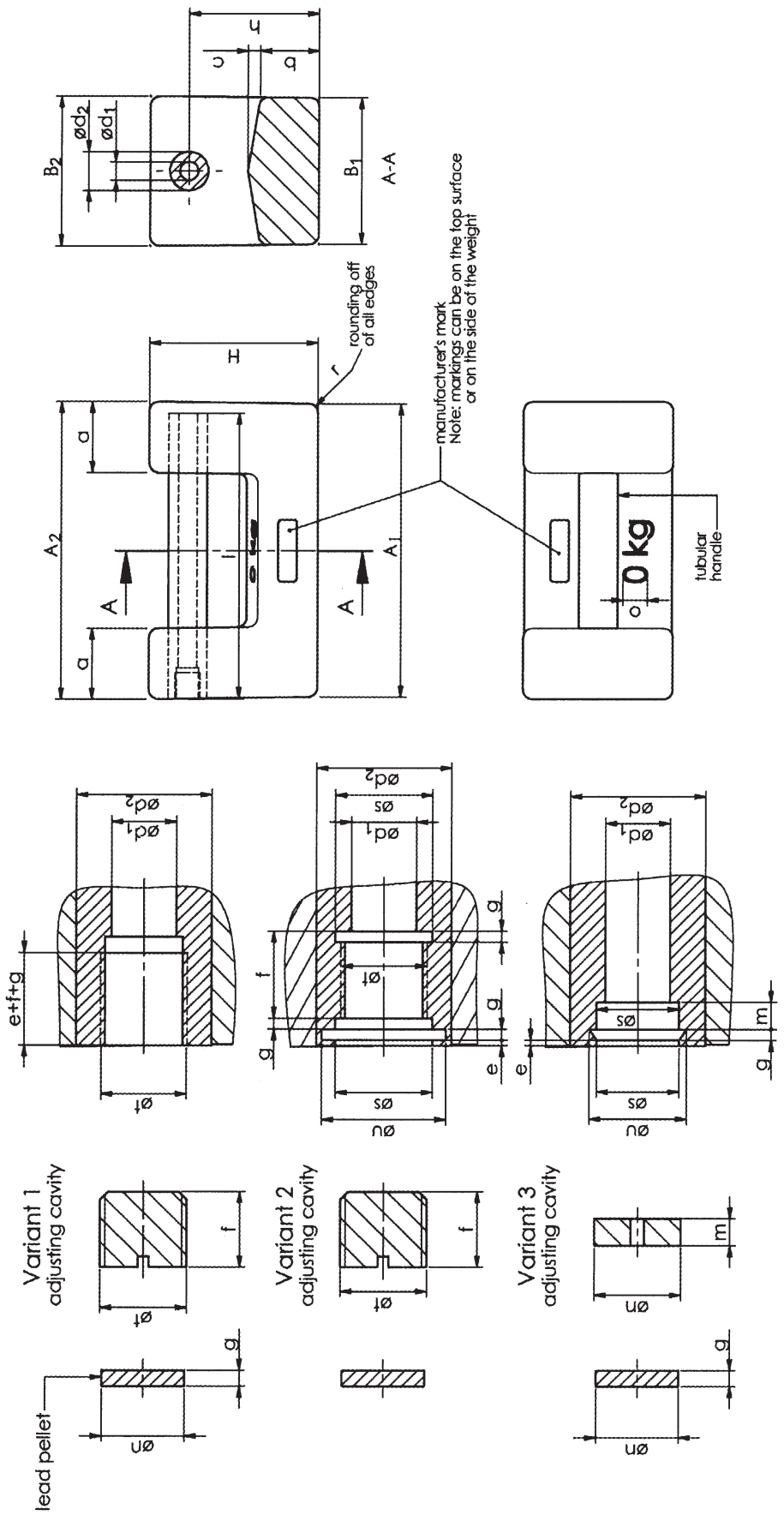

Table of dimensions (in millimeter)

Nominal value	A_1	A_2	B_1	B_2	H	a	b	c	d_1	d_2	e	f	g	h	l	m	n	o	r	s	t	u
5 kg	150	152	75	77	84	36	30	6	12	19	1	14	2	66	145	5	16	12	5	16,5	M16x1,5	18
10 kg	190	193	95	97	109	46	38	8	12	25	1	14	2	84	185	5	16	16	6	16,5	M16x1,5	18
20 kg	230	234	115	117	139	61	52	12	24	29	2	21	3	109	220	8	27	20	8	27,5	M27x1,5	30
50 kg	310	314	155	157	192	83	74	16	24	40	2	21	3	152	300	8	27	25	10	27,5	M27x1,5	30

Dimensions A and A' as well as B and B' can be reversed.

Figure A.3 Examples of rectangular bar weights (Type 2)

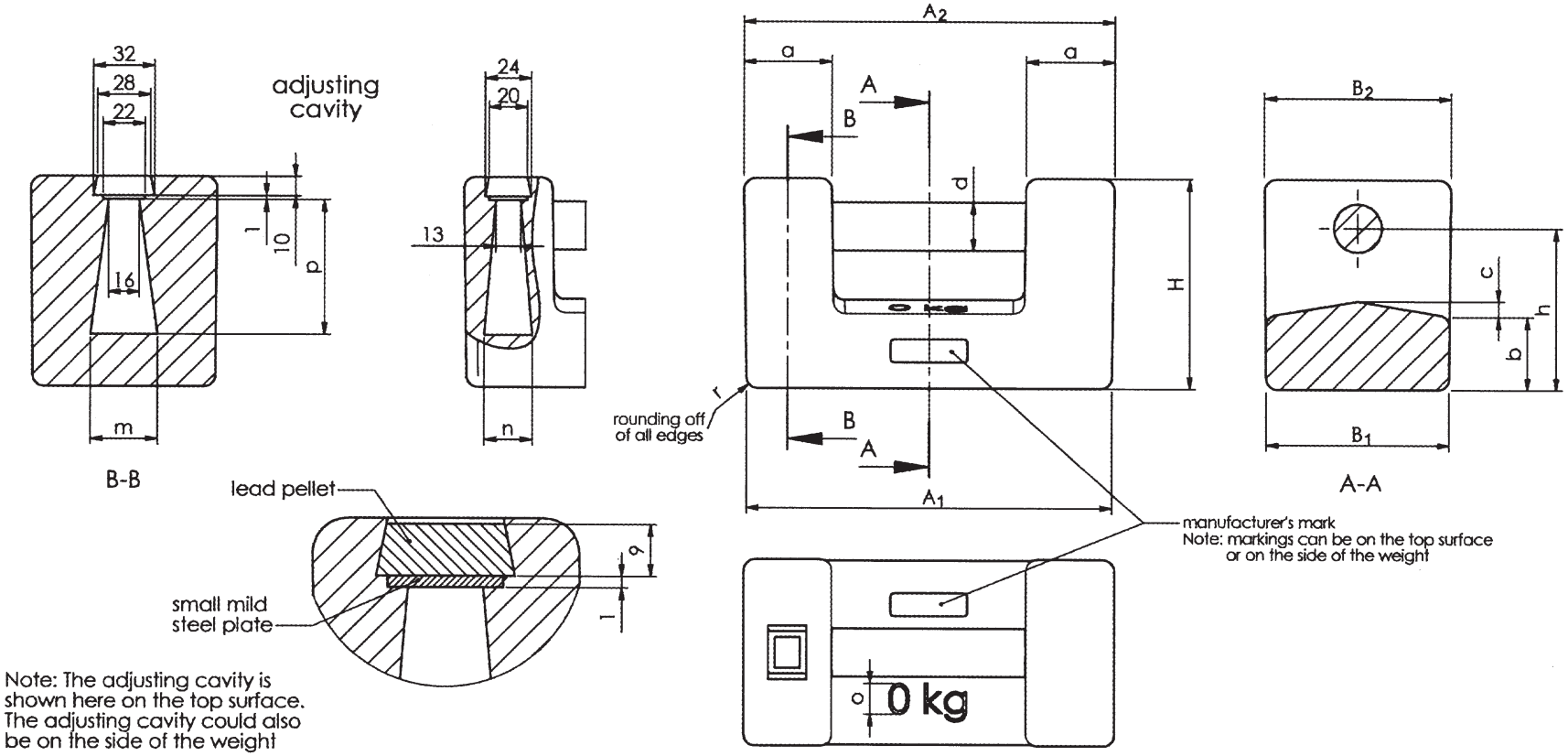

Table of dimensions (in millimeter)

Nominal value	A_1	A_2	B_1	B_2	H	a	b	c	d	h	m	n	o	p	r
5 kg	150	152	75	77	84	36	30	6	19	66	16	13	12	55	5
10 kg	190	193	95	97	109	46	38	8	25	84	35	25	16	70	6
20 kg	230	234	115	117	139	61	52	12	29	109	50	30	20	95	8
50 kg	310	314	155	157	192	83	74	16	40	152	70	40	25	148	10

Dimensions A and A' as well as B and B' can be reversed. The internal dimensions m, n, p of the adjusting cavities are given only as an indication.

Annex B
Test procedures for weights
(Mandatory)

B.1 Introduction

This Annex presents accepted methods to determine selected properties of weights. These methods apply to individual weights or sets.

B.1.1 Test reports must clearly indicate the method by which each test was performed. The methods contained in this Annex may be referenced by their respective section numbers. If other methods are used, then the validity of the method shall be substantiated with documentation.

B.1.2 The term "conventional mass" is used everywhere, except in the density section where the term "real mass" is used (see 2.6).

B.2 Test sequence

The preliminary evaluations and tests are to be performed in the following order (if applicable):

a) Document review and visual inspection according to checklist (see R 111-2 *Test Report Format*);
b) Cleaning weights (B.4);
c) Surface roughness (B.5);
d) Magnetism (B.6);
e) Density (B.7);
   Note: Cleaning must be repeated after the density measurement if the fluid used in the density system was not water (other fluids typically used [e.g. fluorocarbons] leave a residue that must be removed by cleaning with a solvent such as alcohol).
f) Measurement of the conventional mass (Annex C).

B.3 Document review and visual inspection

B.3.1 Administrative examination

Review, according to 15.1, the documentation that is submitted, including necessary photographs, drawings, relevant technical specifications, etc. to determine if the documentation is adequate and correct.

B.3.2 Compare construction with documentation

Examine the physical appearance of the weight and the weight case to ensure compliance with the documentation (according to 6, 7, 8, 14 and 15.1 of this Recommendation).

B.3.3 Initial examination

B.3.3.1 Metrological characteristics

Note the metrological characteristics according to R 111-2 *Test Report Format*.

B.3.3.2 Markings (according to 13 and 16 of this Recommendation)

Check the markings according to R 111-2 *Test Report Format*.

B.4 Cleaning weights

B.4.1 It is important to clean weights before any measurements are made because the cleaning process may change the mass of the weight. Cleaning should not remove any significant amounts of weight material. Weights should be handled and stored in such a way that they stay clean. Before calibration, dust and any foreign particles shall be removed. Care must be taken not to change the surface properties of the weight (i.e. by scratching the weight).

If a weight contains significant amounts of dirt that cannot be removed by the methods cited above, the weight or some part of it can be washed with clean alcohol, distilled water or other solvents. Weights with internal cavities should normally not be immersed in the solvent to avoid the possibility that the fluid will penetrate the opening. If there is a need to monitor the stability of a weight in use, the mass of the weight should, if possible, be determined before cleaning.

B.4.2 After weights are cleaned with solvents they must be stabilized for the times given in Table B.1.

Table B.1 Stabilization time after cleaning

Weight class	E_1	E_2	F_1	F_2 to M_3
After cleaning with alcohol	7–10 days	3–6 days	1–2 days	1 hour
After cleaning with distilled water	4–6 days	2–3 days	1 day	1 hour

B.4.3 Thermal stabilization

Prior to performing any calibration tests, the weights need to be acclimated to the ambient conditions of the laboratory. In particular, weights of classes E_1, E_2 and F_1 should be close to the temperature in the weighing area.

B.4.3.1 The mandatory minimum times required for temperature stabilization (depending on weight size, weight class and on the difference between the initial temperature of the weights and the room temperature in the laboratory) are shown in Table B.2. As a practical guideline, a waiting time of 24 hours is recommended.

Table B.2 [11] Thermal stabilization in hours

ΔT*	Nominal value	Class E_1	Class E_2	Class F_1	Class F_2
± 20 °C	1 000, 2 000, 5 000 kg	-	-	79	5
	100, 200, 500 kg	-	70	33	4
	10, 20, 50 kg	45	27	12	3
	1, 2, 5 kg	18	12	6	2
	100, 200, 500 g	8	5	3	1
	10, 20, 50 g	2	2	1	1
	< 10 g	1			0.5
± 5 °C	1 000, 2 000, 5 000 kg	-	-	1	1
	100, 200, 500 kg	-	40	2	1
	10, 20, 50 kg	36	18	4	1
	1, 2, 5 kg	15	8	3	1
	100, 200, 500 g	6	4	2	0.5
	10, 20, 50 g	2	1	1	0.5
	< 10 g	0.5			

ΔT*	Nominal value	Class E_1	Class E_2	Class F_1	Class F_2
± 2 °C	1 000, 2 000, 5 000 kg	-	-	1	0.5
	100, 200, 500 kg	-	16	1	0.5
	10, 20, 50 kg	27	10	1	0.5
	1, 2, 5 kg	12	5	1	0.5
	100, 200, 500 g	5	3	1	0.5
	< 100 g	2	1		0.5
± 0.5 °C	1 000, 2 000, 5 000 kg	-	-	-	-
	100, 200, 500 kg	-	1	0.5	0.5
	10, 20, 50 kg	11	1	0.5	0.5
	1, 2, 5 kg	7	1	0.5	0.5
	100, 200, 500 g	3	1	0.5	0.5
	< 100 g	1	0.5		

* ΔT = Initial difference between weight temperature and laboratory temperature.

B.5 Surface roughness

B.5.1 Introduction

The stability of the mass of a weight is highly dependent on the surface structure of the weight. A weight with a smooth surface is expected to be more stable than a weight with a rough surface, other things being equal. It is important that the surface of the weight be clean when its surface roughness is evaluated.

B.5.1.1 For new weights without visible scratches, the surface roughness can be quantified in a well-defined way. For surfaces with many scratches, it is more difficult. In dimensional metrology, surface roughness is clearly distinguished from surface defects, such as scratches. However, scratches will collect dirt if the weight is exposed to it, so the amount of scratches should be assessed in parallel to the roughness of the non-scratched part of the surface. The assessment of surface roughness applies only to weights of classes E and F which are greater than or equal to 1 g.

B.5.2 General assessment

Assessing the roughness of a weight is first performed by visual inspection. However for class E and F weights, the assessment should also be performed with a roughness comparison specimen (CS), using a stylus instrument (SI) or other conventional instrument.

Warning: **Use of the stylus instrument may damage or scratch the surface of the weight.**

The roughness of a surface can be characterized by a number of different roughness parameters. Each parameter describes a feature of the surface, which is important for a specific function of the surface.

B.5.2.1 Comparison specimen (CS method)

If the actual value of the surface roughness is not needed, but only has to conform to a certain specification, the surface can be compared visually to a roughness comparison specimen. Such a specimen consists of an array of surface sections of increasing specified roughness. The specimen is considered certified, if it has been calibrated by an accredited laboratory and is accompanied by a certificate. The certification shall include the roughness

parameter, R_z or R_a. The surface of the comparison specimen shall have a similar lay and shall have been produced by similar machining methods as the surface of the weights. Since the weights have plane as well as cylindrical surfaces, two sets of specimens shall be used, one with plane surfaces and one with cylindrical surfaces.

B.5.2.2 Stylus instrument (SI method)

A stylus instrument conventionally measures surface roughness. With this instrument, a sharp stylus is traced very gently along a line on the surface and the vertical movement of the stylus is recorded as a function of the position along the line. In this way a profile of the surface is recorded.

Warning: **Use of the stylus instrument may damage or scratch the surface of the weight.**

B.5.2.3 Other instruments

Instruments other than the traditional instruments are available for roughness measurements such as by the measurement of scattered light [12].

B.5.3 Test procedures

B.5.3.1 Visual inspection (class E, F and M weights)

B.5.3.1.1 Apparatus

a) A well-lit room;

b) Laboratory gloves;

c) Lint-free cloths.

B.5.3.1.2 Measurement procedure

B.5.3.1.2.1 New weights

a) For all classes, visually inspect the surface of the weight:
   1) Note any “dings” or dents in its surface or deep scratches;
   2) The surfaces shall be smooth (see 11.1.1);
   3) The edges shall be round;
   4) For weights from 1 g to 10 kg the surface of the weight shall not be porous.

b) For classes E and F, visually inspect the surface of the weight:
   1) The surfaces shall not be porous (see 11.1.2);
   2) The surfaces shall be glossy.

c) For class M cylindrical weights from 1 g to 50 kg, the surface of the weight shall be smooth and not porous.

d) For class M rectangular weights (5 kg, 10 kg, 20 kg and 50 kg), the finish of the surface shall be like grey cast iron (11.1.3).

e) For class M_3 weights greater than or equal to 50 kg, the surface may be coated with materials suitable for providing protection against corrosion by rendering the surface impermeable. This coating shall withstand shock and other atmospheric conditions (8.5.1).

B.5.3.1.2.2 Used weights

In addition to B.5.3.1.2.1, inspect the surface of the weight for traces of use as follows.

Visually inspect the surface of the weight. Used weights will normally have scratches, particularly on the bottom surface:

1) If the number and depth of the scratches is compatible with the adequate stability of the weight, the weight may be accepted;

2) During the assessment of surface roughness, individual scratches and other defects shall not be taken into account; or

3) If the scratches are too numerous to assess the surface roughness, the weight shall not be accepted.

B.5.3.1.3 Reporting of results

Record the assessment on the forms in R 111-2 *Test Report Format*, indicating "visual inspection" as the method of assessment.

B.5.3.2 Roughness comparison specimen (CS method) (class E and F weights)

The roughness of the surface may be compared visually against roughness comparison specimens.

B.5.3.2.1 Apparatus

a) A clean certified roughness comparison specimen (see B.5.2.1);

b) A well-lit room;

c) Laboratory gloves;

d) Lint-free cloths.

B.5.3.2.2 Measurement procedure

a) Clean the surface of the comparison specimen with clean lint-free cloth dipped in alcohol. If the surface of the weight does not appear to be clean, it must be cleaned as well.
Note: Cleaning may change the mass of a weight significantly. See B.4 on the cleaning of weights.

b) Hold the weight up against a section of the comparison specimen with the lays of the two surfaces being parallel.

c) Look simultaneously at the two surfaces at different angles.

d) Assess whether the roughness of the weight appears to be smaller or larger than the particular section of the roughness comparison specimen.

e) Repeat with different samples within the comparison specimen and determine the upper limit.

B.5.3.2.3 Reporting of results

Record the R_a and R_z values that best resemble the test weight using the forms in R 111-2 *Test Report Format*, indicating "CS" as the method of assessment. If the visual assessment clearly indicates that the roughness, R_z or R_a , of the weight surface is smaller than the maximum value specified in 11.1.2, no further measurements of the roughness are necessary. If there is a doubt, the roughness, R_z or R_a, shall be measured with a stylus instrument.

B.5.3.3 Roughness measurement using stylus instruments (SI method) (class E and F)

This section applies only to weights for which the compliance to the surface roughness requirement cannot be assessed without a doubt by visual examination. Before use, the stylus instrument shall be properly calibrated using calibration specimens certified according to ISO 5436 [13]. Other instruments may be used only if traceability to the unit of length has been documented.

B.5.3.3.1 Apparatus

a) Stylus instrument as defined in ISO 3274 [14];

b) Laboratory gloves.

B.5.3.3.2 Measurement procedure (in accordance with ISO 4288 [15])

a) Make at least 6 measurements:
   1) Two on the plane top surface; and
   2) Four on the cylindrical surface.

b) Do not include scratches or other surface defects in the traced profiles.

c) All the measured values of the surface roughness, R_z or R_a, must be smaller than the maximum values specified in Table 6 in 11.1.2.

B.5.3.3.3 Reporting of results

Record the R_a and R_z values that best resemble the test weight using the forms in R 111-2 *Test Report Format*, indicating "SI" as the method of the assessment.

B.6 Magnetism

B.6.1 Introduction

Magnetic forces can adversely affect the weighing process, since without systematic investigation, these spurious forces cannot be distinguished from gravitational forces in the determination of mass. Magnetic forces can arise from the mutual interaction of two mass standards, as well as between a mass standard, the mass comparator being used for the weighing, and other magnetic objects in the vicinity.

B.6.1.1 General considerations

The magnetic properties (magnetization and susceptibility) of the mass standards should be determined before the mass calibration (Annex C) to ensure that the magnetic interactions are negligible. A weight that fails the magnetism test should not be calibrated.

B.6.1.1.1 It is not necessary to measure the magnetic properties of weights made of aluminum, as they are known to be non-magnetic and have a magnetic susceptibility, χ, of much less than 0.01. Additionally, for small weights (< 2 g) and for the lower accuracy classes (F_1 and below, < 20 g), it is sufficient to refer to the manufacturer's specification of the magnetic properties of the material used to make the weights (see B.6.3).

B.6.1.1.2 Many weights in class M are made of cast iron or simple steel alloys. Therefore, class M weights have, more often than for class E and F weights, large relative errors due to magnetic interaction between the weight and the weighing instrument. All metals have some magnetic susceptibility. However, alloys containing magnetic impurities will have an increased susceptibility and may become magnetized.

Note: Magnetic forces from the sides of weights also need to be considered but are not, however, dealt with in this edition of R 111.

B.6.1.2 Overview to test procedures

Sections B.6.2 to B.6.6 describe two accepted methods for determining the magnetization of weights (B.6.2 and B.6.4) and four accepted methods for determining the magnetic susceptibility (B.6.3, B.6.4, B.6.5, B.6.6), including formulae for calculating the magnetization and magnetic susceptibility. Limits for the permanent magnetization and magnetic susceptibility are given in 9.1 and 9.2. The recommended methods for the various accuracy classes and nominal masses are shown in Tables B.3(a), B.3(b) and B.3(c). Alternative methods may also be used provided that their validity is substantiated in appropriate documentation that is to be attached to the test report.

Note: A full characterization of magnetization of weights is technically impractical. The methods presented here rely on approximations that have proven to be useful. In cases where the different methods presented here give inconsistent results, the order of preference is: B.6.4, B.6.2 (Hall probe), B.6.2 (fluxgate probe).

B.6.2 Method to determine the permanent magnetization, Gaussmeter

The permanent magnetization of a weight can be estimated from the measurement, with a Gaussmeter, of the magnetic field close to the weight. This method can be used with all accuracy classes as listed in Table B.3 (c).

B.6.2.1 General considerations

a) The room where the test is being performed should be checked for the direction of the ambient magnetic field with a Gaussmeter before commencing a test. The test should be conducted in an area free of ferromagnetic objects. The operator should not carry or wear ferrous objects.

b) Measure the magnetic field due to the weight with, for example, a Hall sensor (preferred instrument) or a fluxgate magnetometer. A fluxgate magnetometer shall not be used for weights smaller than 100 g. Align the probe so that its sensitive axis is perpendicular to the surface of the weight.

c) The measurement should be taken in the direction where the ambient magnetic induction sensed by the probe is close to zero.

d) Alternatively, the value of the ambient induction should be subtracted from the measured induction when the weight is present.

B.6.2.2 Apparatus

a) Gaussmeter, such as a Hall sensor or fluxgate magnetometer;

b) Tools for handling weights (e.g. laboratory gloves, lint-free cloth, laboratory tweezers); and

c) A well-lit room.

B.6.2.3 Measurement procedure

a) Zero the meter.

b) Place the probe on a non-magnetic surface.

c) Take a reading of the magnetic field with a particular orientation of the probe. The value is a measure of the ambient magnetic field. This reading will be subtracted from any future reading taken on or near the weight.

d) Place the weight over the sensor while maintaining the probe orientation. The center of the bottom of the weight shall be placed over the sensor. Check for homogeneous magnetization by moving the weight from the center to the border of the bottom and observe the changes in the reading. If it does not decrease smoothly, the weight may be inhomogeneously magnetized.

e) If the weight is homogeneously magnetized, measurements may be carried out at the center of the bottom, close to the surface of the weight, without contact and in accordance with the specifications of the Gaussmeter.

Note: For some probes, such as the fluxgate, the sensor is located at a distance from the end of the probe [16]. This usually results in lower magnitudes for field strength than those obtained with a Hall sensor placed as near to the weight as possible. If the weight is inhomogeneously magnetized, measurements shall be carried out along the central axis of the weight at a distance from the surface of at least half the diameter of a cylindrical weight or of at least half the largest dimension of a rectangular weight. The readings of the probe must be corrected by the formula given below.

f) Read the indication (which may be in mT). Record in μT.

g) Reverse the weight for measuring the top (only for weights with a flat top), then repeat steps d–f above.

h) Correct the probe reading and estimate the polarization, $\mu_0 M$, by the following equation:

$$\mu_0 M = \frac{2B}{\dfrac{d+h}{\sqrt{R^2+(d+h)^2}} - \dfrac{d}{\sqrt{R^2+d^2}}} - f(B_E) \qquad \textit{(B.6.2-1)}$$

with: $f(B_E) = 5.4\, B_E$ for class M weights *(B.6.2-2)*

and: $f(B_E) = \dfrac{\chi}{1+0.23\chi} B_E$ for class E and F weights *(B.6.2-3)*

where: B = Gaussmeter reading with the weight present (ambient field subtracted, see c);

B_E = Gaussmeter reading of the ambient magnetic field with the weight absent;

d = distance between the center of the sensing element (which is embedded within the probe) and the surface of the weight;

h = height of the weight;

R = radius of a cylindrical weight or, in the case of a rectangular weight, the radius of a circle with the same area as the measured plane of the weight.

Note: B and B_E may, in some cases, have different signs.

i) The equipment used, and the distance shall in all cases be noted on the test report.

B.6.2.4 Uncertainty

These devices are calibrated with an uncertainty commensurate with the requirement that the magnetization may be determined with an uncertainty limit that is less than one third of the error limit given in Table 3. This procedure results in an expanded uncertainty, U (k = 2), of the magnetization of approximately 30 % (including the Gaussmeter calibration uncertainty). However, simplifications in the method cannot be accounted for in this uncertainty. Therefore, the magnetization so determined is a conventional, though useful, value.

B.6.2.5 Recording results

Record the measurement results using the forms in R 111-2 *Test Report Format*.

B.6.3 Material specification

The measurement of the magnetic susceptibility can be performed using procedure B.6.4 on a test piece taken from a piece of the metal used to manufacture the weight. In this case, the expanded uncertainty, U (k = 2), of the measurement shall be increased by 20 % to take into account the possible variation of this parameter in the piece of metal. However, all of the finished weights must meet the requirements given in Table 3. Due to saturation effects in measuring the magnetic susceptibility, the magnetic field applied to the weight shall be sufficiently small (< 4 kA m^{-1} for typical steel alloy).

B.6.3.1 Weights manufactured from aluminum have a magnetic susceptibility, $\chi << 0.01$.

B.6.3.2 For small weights under 2 g, refer to the manufacturer's specification of the magnetic properties of the material used to manufacture.

B.6.3.3 For class F weights of less than 20 g, refer to the manufacturer's specification of the magnetic properties of the material used in their manufacture.

B.6.4 Magnetic susceptibility and permanent magnetization, the susceptometer method

B.6.4.1 Principles of the test

This method may be used to determine both the magnetic susceptibility and the permanent magnetization of weakly-magnetized weights through measurement of the force exerted on a mass standard in the magnetic field gradient of a strong permanent magnet [see Figure B.1].

This method is only applicable to weights where the magnetic susceptibility, $\chi < 1$. The susceptometer method is not recommended for multi-piece weights. To use this method, familiarity with reference [6] is required. In a typical arrangement, the susceptometer has a measurement volume that is limited in extent (some 10 cm^3) on the table, close to and vertically above the magnet. For weights more than 2 kg make the measurement at the middle of the base of the weight (if it is thought necessary to measure permanent magnetization at several places along the base use a Gaussmeter in lieu of a susceptometer). Normally the weight should be upright. For measurement of the magnetic properties of the sides or the top, more elaborate methods [6] are required.

B.6.4.2 General considerations

There is significant risk that the **procedure can cause permanent magnetization** of the test weight if it is exposed to magnetic fields which are too high (> 2 kA m^{-1} for a typical steel alloy of class E_1). It is recommended, for instance, that tests of class E_1 weights be made first at a distance, Z_0, of about 20 mm between the mid-height of the magnet and the base of the weight (see Figure B.1). Then only decrease Z_0 if the sample susceptibility is too small to produce a reasonable signal [6]. Additional precautions may be necessary when testing weights of higher susceptibility (see B.6.4.5 c).

B.6.4.3 Apparatus

a) A weighing instrument with a scale interval not larger than 10 µg;

b) A non-magnetic table to place the weight on;

c) A cylinder to place the magnets on;

d) Cylindrical magnets with magnetic moment, m_d, in the order of 0.1 A m^2 (this moment is typical of samarium-cobalt or neodymium-iron-boron magnets of about 100 mm^3 in volume) [6].

B.6.4.4 Illustration of the apparatus

The height of the magnet should ideally be equal to 0.87 times its diameter [6] although a height-to-diameter ratio of 1 is acceptable. Z_0 is the distance from the mid-height of the magnet to the base of the weight.

Figure B.1 Apparatus for magnetic susceptibility and magnetization, the susceptometer method

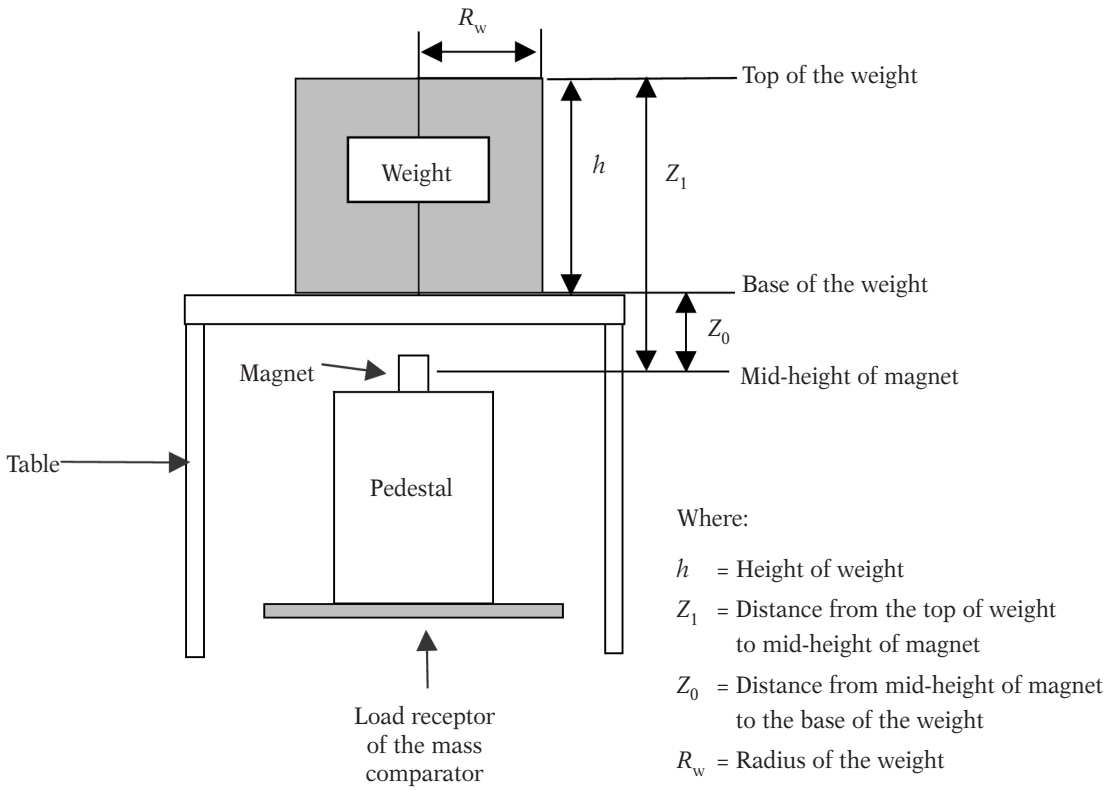

B.6.4.5 Measurement procedure

These tests should be carried out in an area free of large ferrous objects. The operator should not carry or wear ferrous objects.

a) Measure the different parameters (Z_0, R_w, h), see the illustration of the apparatus, Figure B.1, see also [6] for measurement of Z_0.

b) The value of the acceleration due to gravity, g, needs to be known to about 1 %.

c) Place the magnet with its north pole pointing down (the north pole of a cylindrical magnet is the end which repels the north pole of a compass needle). The dipole moment, m_d, will be needed.

The magnet produces a maximum field at the top surface of the table of:

$$H = \frac{m_d}{2\pi \times Z_0^3} \qquad (B.6.4\text{-}1)$$

where H is in units of A m^{-1}, for m_d in A m^2 and Z_0 in m.

It is important that initially, H should not exceed 2000 A m^{-1} when testing class E_1 weights, 800 A m^{-1} when testing class E_2 weights and 200 A m^{-1} when testing weights of other classes. The field, H, may be increased only if the susceptometer signal is too weak. In this case, the field, H, is increased by reducing the height, Z_0.

d) Set the instrument to zero.

e) Place the weight on the table such that its axis coincides with the magnet's vertical axis, and take a reading. Turn the weight around its vertical axis repeatedly with increasing angles and take the readings at each position. For the following procedures, turn the weight to the angle where the reading shows the maximum deviation from zero.

f) Place the weight on the table, normally three times, directly above the magnet. Be sure weight is centered.

1) Record the time at which the load is placed, the time at which a reading is taken and the time when the load is removed.
2) Calculate Δm_1 from the repeated readings. Normally Δm_1 will be negative, indicating that the magnet is slightly attracted to the weight.
3) The force, F_1, is determined as $F_1 = -\Delta m_1 \times g$ *(B.6.4-2)*

g) The measurement should be repeated with the magnet turned upside down.

1) The distance Z_0 is to be kept constant.
2) Set the instrument to zero.
3) Again, place the weight on the table, normally three times, directly above the magnets. Be sure the weight is centered.
4) Record the time at which the load is placed, the time at which a reading is taken and the time at which the load is removed.
5) Calculate Δm_2 from the repeated readings. Normally Δm_2 will be negative but may be significantly different from Δm_1.
6) The force, F_2, is determined as $F_2 = -\Delta m_2 \times g$ *(B.6.4-3)*

h) Repeat steps d–g above.

B.6.4.6 Calculations

Calculate the magnetic susceptibility, χ, and permanent magnetization, M_z, of the weight by inserting the different parameters in the equations given below. Assume that the susceptibility of air is always negligibly small.

B.6.4.6.1 If measuring both F_1 and F_2, the expression for the **magnetic susceptibility** is given by:

$$\chi = \frac{F_a}{I_a \times F_{max} - 0.4F_a} \qquad (B.6.4\text{-}4)$$

where: $$F_{max} = \frac{3\mu_0}{64\pi} \times \frac{m_d^2}{Z_0^4} \qquad (B.6.4\text{-}5)$$

$$F_a = \frac{F_1 + F_2}{2} \qquad (B.6.4\text{-}6)$$

and for the **magnetic polarization** by:

$$\mu_0 M_Z = \frac{F_b}{\frac{m_d}{Z_0} \times \frac{1}{4\pi} \times I_b} - \frac{\chi}{1 + 0.23\chi} B_{EZ} \qquad (B.6.4\text{-}7)$$

where: $$F_b = \frac{F_1 - F_2}{2} \qquad (B.6.4\text{-}8)$$

B_{EZ} is the vertical component of the ambient magnetic induction in the laboratory. Usually, B_{EZ} can be taken as the vertical component of the earth's magnetic induction at the location of the laboratory, in which case – 48 µT < B_{EZ} < 60 µT depending on latitude. The magnitude of B_{EZ} is zero at the earth's equator and maximum at its poles. The sign of B_{EZ} is positive in the northern hemisphere and negative in the southern hemisphere.

B.6.4.6.2 The geometric correction factors, I_a, and I_b, in the above equations are given by, respectively:

$$I_a = 1 - \left[\frac{Z_0}{Z_1}\right]^4 - \frac{1 + \frac{(R_w / Z_0)^2}{3}}{\left[1 + \left(\frac{R_w}{Z_0}\right)^2\right]^3} + \left[\frac{Z_0}{Z_1}\right]^4 \times \frac{1 + \frac{(R_w / Z_1)^2}{3}}{\left[1 + \left(\frac{R_w}{Z_1}\right)^2\right]^3} \qquad (B.6.4\text{-}9)$$

and

$$I_b = 2\pi \left[\frac{\left(\frac{R_w}{Z_0}\right)^2}{\left(1 + \left(\frac{R_w}{Z_0}\right)^2\right)^{3/2}} - \frac{\left(\frac{R_w}{Z_0}\right)^2 / \left(\frac{Z_1}{Z_0}\right)^3}{\left(1 + \left(\frac{R_w / Z_0}{Z_1 / Z_0}\right)^2\right)^{3/2}} \right] \qquad (B.6.4\text{-}10)$$

For more information about I_a and I_b see [6]. The susceptibility of air may be neglected for all practical purposes.

B.6.4.6.3 The formulas given above are for a cylindrical weight. If the weight does not have the form of a perfect cylinder, then additional corrections or a larger uncertainty may be required. For instance, further calculations are necessary to account for recessed base, knob, etc. as detailed in [6]. Corrections for these shape effects are largest for the smallest masses (2 g) where they amount to about 10 %.

B.6.4.7 Uncertainty

This procedure results in an uncertainty for the magnetic susceptibility in the range of 10 % to 20 %. The uncertainty associated with this method is larger for small weights [17, 18, 40].

B.6.4.8 Recording results

Record the measurement results using the forms in R 111-2 *Test Report Format*.

B.6.5 Magnetic susceptibility, the attracting method

B.6.5.1 Principles of the test

The quantity being measured by this method is the relative magnetic permeability, as determined by comparing the magnetic force exerted by a permanent magnet on the mass standard with a corresponding force on permeability standard (see Figure B.2). The magnetic susceptibility, χ, is calculated by using the equation for the relationship between the relative magnetic permeability and the magnetic susceptibility ($\mu_r = 1 + \chi$).

This method may be used on weights of 20 g and greater, and for E_2 – F_2 weights [18 and 19] (see also Table B.3(b)). Normally, the instruments available for this method may only be used to determine magnetic permeability in the range $1.01 \leq \mu_r \leq 2.5$ ($0.01 \leq \chi \leq 1.5$).

B.6.5.2 General considerations

A disadvantage of this method is that the available instruments are difficult to calibrate.

Warning: **There is also a risk that the procedure will cause permanent magnetization of the test weight.**

The magnet is attracted to the weight or the reference material depending on which of them has the greater magnetic permeability.

B.6.5.3 Apparatus

a) A magnet balanced on a pivot with a counterweight (Figure B.2);

b) A reference material of known magnetic permeability;

c) Tools for handling weights (e.g. laboratory gloves, lint-free cloth, laboratory tweezers);

d) A well-lit room.

B.6.5.4 Illustration of the apparatus

Figure B.2 gives an illustration of the apparatus. Normally the instrument includes a set of inserts (reference materials) that may be used.

Figure B.2 Apparatus for magnetic susceptibility, the attracting method

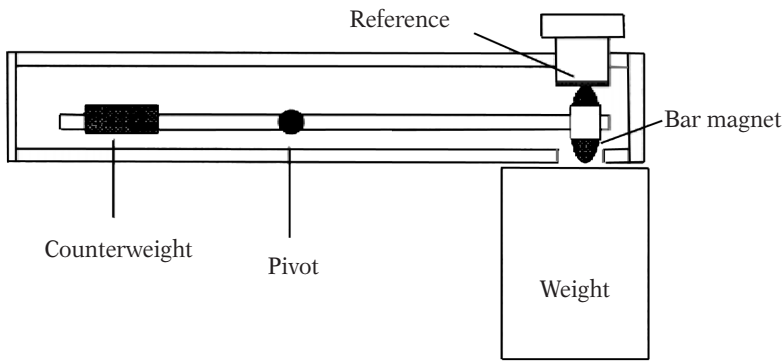

B.6.5.5 Measurement procedure

a) Insert a suitable reference material with known relative magnetic permeability in the instrument.

b) Install the instrument in a stable position with the magnet pointing downwards.

c) Move the weight towards the instrument (bar magnet with the known reference material) until it touches the instrument.

d) Then remove the weight very gently from the instrument.

e) If the bar magnet is attracted to the weight, then the relative permeability of the weight is higher than that of the reference material.

f) This test shall be performed at different locations on both the top and the bottom of the weight.

To provide traceability to these susceptibility determinations, the procedure should be repeated with measurements on a sample of known susceptibility (e.g. as determined by the susceptometer in B.6.4).

B.6.5.6 Uncertainty

The instrument has an associated uncertainty of the permeability of approximately 0.3 % (30 % in the susceptibility) at the lowest permeability (μ_r = 1.01) and 8 % (13 % in the susceptibility) at the highest permeability (μ_r = 2.5). The measurement procedure may have large uncertainties [19].

B.6.5.7 Recording results

Record the measurement results using the forms in R 111-2 *Test Report Format*.

B.6.6 Magnetic susceptibility, the fluxgate method

B.6.6.1 Principles of the test

The method determines the relative magnetic permeability of an object by use of a fluxgate magnetometer with a permeability probe containing a permanent magnet placed close to the object [20].

Warning: **There is a risk that the procedure may cause permanent magnetization of the test weight.**

B.6.6.2 General considerations

Normally, the instruments available for this method may be used to determine magnetic permeability in the range $1.0001 \leq \mu_r \leq 2.00$ ($0.0001 \leq \chi \leq 1.00$). To provide traceability in these determinations, the procedure should be repeated with measurements on a sample of known susceptibility (e.g. an appropriate reference material certified by an accredited laboratory).

B.6.6.3 Apparatus

a) A fluxgate magnetometer with a permeability probe containing a permanent magnet;

b) A reference material of known magnetic permeability;

c) Tools for handling weights (e.g. laboratory gloves, lint-free cloth, laboratory tweezers);

d) A well-lit room.

B.6.6.4 Measurement procedure

Refer to manufacturer's specifications.

B.6.6.5 Uncertainty

The instrument has an associated uncertainty of the permeability of approximately 0.2 % (from 40 % to 4 % in susceptibility) in the range $1.005 \leq \mu_r \leq 1.05$ ($0.005 \leq \chi \leq 0.05$) [20]. Refer to manufacturer's specifications.

B.6.6.6 Recording results

Record the measurement results using the forms in R 111-2 *Test Report Format*.

B.6.7 Recommended methods for determining magnetization and susceptibility by weight class and weight size

B.6.7.1 Measurements are to be made on finished weights.

B.6.7.2 The Gaussmeter (B.6.2) can be used to determine the magnetization for all accuracy classes, the Hall sensor for nominal values ≥ 1 g, and the Fluxgate for nominal values ≥ 100 g.

B.6.7.3 Tables B.3(a), (b), and (c) give recommended procedures for the various weight classes.

Table B.3(a) Permanent magnetization, susceptometer method (B.6.4)

Weight size	Class
≥ 20 g	E_1, E_2, F_1 and F_2 weights without adjusting cavity
2 g ≤ m < 20 g	E_1, E_2 and F_1
≤ 2 g	E_1 and E_2

Table B.3(b) Susceptibility

Weight size	Class E_1	Class E_2	Class F_1	Class F_2
5 000 kg			F A S*	F A S*
2 000 kg				
1 000 kg		F A S*		
500 kg				
200 kg				
100 kg				
50 kg	S F	F A S	F A S	F A S
20 kg				
10 kg				
5 kg				
2 kg				
1 kg				
500 g				
200 g				
100 g				
50 g	S	S	A S	A S
20 g				
10 g			Sp	Sp
5 g				
2 g				
1 g	Sp	Sp		
500 mg				
200 mg				
100 mg				
50 mg				
20 mg				
10 mg				
5 mg				
2 mg				
1 mg				

Sp Material specification (B.6.3)

S Susceptometer for weights without adjusting cavity (B.6.4)

A Attracting method (B.6.5)

F Fluxgate + permanent magnet (B.6.6)

S* Methods F and A are preferred for class E_2 weights from 100 kg to 1 000 kg. This is because the effort required to build an appropriate device and perform the susceptometer measurements exceeds its benefit when compared with methods F and A for class E_2 weights from 100 kg to 1 000 kg. The susceptometer method is not recommended for multi-piece weights.

Table B.3(c) Permanent magnetization, Gaussmeter (B.6.2)

Weight size	Accuracy class
≥ 1 g (Hall sensor) ≥ 100 g (Fluxgate)	E_1, E_2, F_1, F_2, M_1, M_{1-2}, M_2, M_{2-3}, M_3

B.7 Density

B.7.1 Introduction

Table 5 gives the density limits for weights. Following are six accepted methods for the determination of the density of weights. Alternative methods, for example weighing with a balance immersed in fluorocarbon fluid [21], or using an acoustic volumeter [22, 23], may be used if their validity is substantiated in appropriate documentation that is to be attached to the test report. The test methods A, B, C and D use water or another suitable test liquid as a density reference. Methods E and F are appropriate for a lower class of weights, or if the immersion in a liquid is not acceptable. Table B.4 is a summary of the methods for determining density. Table B.8 (at the end of B.7) gives the recommended method of density determination by class.

Table B.4 Methods for determining density

Method	Description
A	Most accurate method. A hydrostatic technique comparing the test weight with a reference weight both in air and in a liquid of known density.
B	Fastest and most suitable method. Weighing the weight in water and verifying that the balance indication is within tabulated limit values, or calculating the density from the balance indication and the known actual mass of the test weight.
C	Separate determination of the mass and volume of the test weight. The volume is determined from the increase in the balance reading when the weight is suspended into a water bath placed on a balance pan.
D	This technique is suitable for weights > 1 kg. Weighing of a liquid-filled test container of well-defined volume capacity with and without the test weight inside.
E	This technique is appropriate for weights with cavities that must not be immersed in water. Calculating the volume from the dimensions of the weight.
F	Estimating the density based on the known composition of the alloy from which the weight is manufactured.

B.7.1.1 The verification of density limits has to take into account the uncertainty inherently connected with the test method used. Table B.5 gives a general estimate of uncertainty associated with each method. For each weight, the expanded uncertainty, U (for k = 2), of the density shall be within the limits:

$$\rho_{min} + U \leq \rho \leq \rho_{max} - U \qquad (B.7.1\text{-}1)$$

However, if the uncertainty of the density test can be kept low, an increased range of results can be accepted for verification, as illustrated in Figure B.3. Lower uncertainties can be achieved with careful work.

Table B.5 Estimated typical uncertainties, U (for k = 2) by method and weight size (in kg m^{-3})

Method	50 kg	1 kg	1 g
A1	-	1.5	60
A2/A3	-	3	60
B1	5	5	60
B2	20	20	60
C	10	10	100
D	5	10	-
E	30	40	600
F	130 to 600		

Figure B.3 Density tolerance and verification limits due to measurement uncertainty

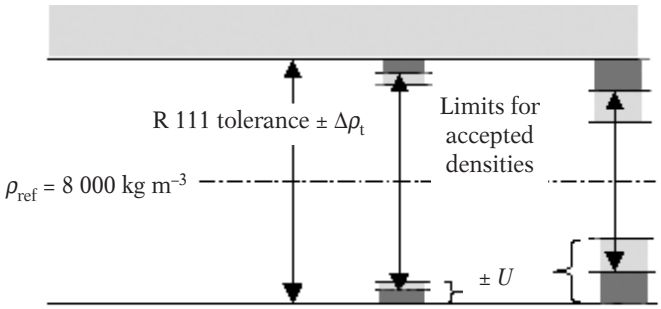

B.7.2 General considerations

B.7.2.1 Reference temperature

The reference temperature for a density statement is 20 °C. If the measurement is performed at a different temperature (other standard laboratory temperatures are 23 °C or 27 °C), the density should be recalculated for 20 °C making use of the volume expansion coefficient, γ, of the material. If γ is not explicitly known, it is suggested for stainless steel weights to use $g = 50 \times 10^{-6}$ °C^{-1}.

$$\rho(t_{\text{ref}}) = \rho(t_{\text{meas}}) \times \left[1 + \gamma\left(t_{\text{meas}} - t_{\text{ref}}\right)\right] \qquad (B.7.2\text{-}1)$$

Measurement uncertainty:

$$u^2\left(\rho(t_{\text{ref}})\right) = u^2\left(\rho(t_{\text{meas}})\right)\left[\frac{\rho(t_{\text{ref}})}{\rho(t_{\text{meas}})}\right]^2 + u^2(\gamma)\rho^2(t_{\text{meas}})\left(t_{\text{meas}} - t_{\text{ref}}\right)^2 + u^2(t_{\text{meas}})\rho^2(t_{\text{meas}})\gamma^2 \qquad (B.7.2\text{-}2)$$

B.7.2.2 Verification requirements for small weights

The density of small weights, for which Table 5 gives no limiting values, need not be checked. The density of weights with a mass smaller than 1 g should be assumed according to method F (see below) referring to the manufacturer's information on the material the weights are made of.

B.7.2.3 Immersion liquid

The immersion liquid shall have no effect on the weights. Distilled and de-aerated water is preferable, as its density is a well-known function of temperature [24] [25][1] and its purity is easy to control [26][2]. The equations in this section assume a constant value for the liquid density. For manual calculations performed with a pocket calculator, Table B.6 lists some density values for water. The air density can be calculated using the approximation formula *(E.3-1)*.

Table B.6 Density of water

t_l [°C]	ρ_l [kg m^{-3}]	$\Delta\rho_l/\Delta t_l$ [kg m^{-3} °C^{-1}]
18.0	998.593	
18.5	998.499	– 0.190
19.0	998.402	
19.5	998.303	– 0.201
20.0	998.201	
20.5	998.096	– 0.212
21.0	997.989	
21.5	997.879	– 0.222
22.0	997.767	
22.5	997.652	– 0.232
23.0	997.535	
23.5	997.415	– 0.242
24.0	997.293	

B.7.2.4 Water penetration into the adjustment cavity

Weights containing an adjustment cavity should not be immersed in water as it may enter the cavity during the measurement. This would affect both the density and the mass of the weight, and it would be harmful for the stability of the mass. For weights with a cavity, the geometric volume determination is the first choice. If, however, all water can be removed afterwards, the hydrostatic weighing should be performed with an open cavity, carefully removing trapped air.

B.7.2.5 Air removal

For accurate measurements in water, it is very important to remove air bubbles from the weight and the weight holder. This is also true for the walls in the liquid bath for methods C and D, especially if small weights are concerned[3]. A practical way to reduce the risk of air bubbles is to de-aerate the water and the weight in the water by applying a sub-atmospheric pressure to the containing compartment for about 10 to 15 minutes[4].

B.7.2.6 Weight holder and suspension wire

Placing the weight on the weight holder under water may accidentally lead to damage to both the weight and the bath (glass). It is advantageous to immerse the weight and the weight holder together. Air bubbles, however, can

(1) A weight that was not cleaned before the test may show a lower weight value after immersion in pure water and following stabilization.
(2) Other liquids with well-known and stable densities may be used. It is essential for small measurement uncertainties to work at constant and well-known temperature conditions. This is even more important if a liquid with a higher temperature expansion coefficient than that of water is used.
(3) For example, in the case of a 20 mg weight, a change in the balance reading of 20 µg would lead to a difference in the density result of 80 kg m^{-3}.
(4) The density of air saturated with water is about 0.0025 kg m^{-3} lower than that of air-free water.

better be detected, if the weight holder and weight are submersed separately. Use a weight holder that can prevent the weight from falling. If a low measurement uncertainty is required, the suspension wire should be thin, clean and pass the air/water interface at a right angle[5].

B.7.2.7 Mass or conventional mass

In the formulae given below, mass can be taken as conventional mass and vice versa, because considering the uncertainty obtained and required for the density of a weight, the difference between the values of its mass and conventional mass is of no concern. For the same reason, the nominal value can be taken for the mass or conventional mass of a weight, provided it can be assumed that its conventional mass complies with the corresponding maximum permissible error given in Table 1.

B.7.2.8 Drying the weight

After removing the weight from the water bath most of the water will immediately run off the weight's surface. Remaining droplets should be wicked off with a fine tissue. For stabilization, the weight can be placed under a suitable cover (upside down beaker on spacers to allow ventilation).

B.7.3 Measurement of a test piece

The measurement of the density can be performed on a single test piece taken from the piece of metal used to manufacture the weight. The test piece is taken as close as possible to the weight and has a suitable volume and form for the measurement of its density. The roughness of the test piece is the same or smaller than the roughness of the weight. The density of the weight is assumed to equal the density of the test piece. The standard uncertainty of this value is obtained by combining a relative standard uncertainty component, equal to 5×10^{-5}, with the standard uncertainty of the density of the test piece.

B.7.4 Test method A (Hydrostatic comparison)

This method can be performed in three different ways:

Method A1 (two different reference weights weighed in air):
Comparison between test and reference weight in air and comparison between test weight in liquid and a second reference weight in air;

Method A2 (reference weights weighed in air and in the liquid):
Comparison between test weight and reference weight in air and comparison between test weight and (same or different) reference weight, both in liquid; or

Method A3 (direct weighing):
Weighing the test weight in air and in liquid using the balance indication instead of the mass of reference weights.

B.7.4.1 Apparatus

a) Laboratory balance(s) of sufficient capacity and high resolution (typically 2×10^{-6} relative resolution), equipped to weigh a load suspended below the balance;

b) Water bath capable of thermostatic control within 20 °C ± 0.2 °C;

c) Suspension wires and weight holders for the different weight sizes;

d) Mechanism to load and unload the weight holder in water;

e) Mass standards of known density;

f) Tools for handling weights (e.g. laboratory gloves, lint-free cloth, laboratory tweezers);

g) A well-lit room.

(5) A comparison method takes into account that the holder as well as the immersed suspension wire displaces water. It further compensates for the extra force due to the formation of a meniscus at the air/water interface, which is not reflected in the following equations. A wire diameter, ϕ, of 0.1 to 0.3 mm for weights of up to 2 kg is suitable in most cases.

Figure B.4 Illustration of method A

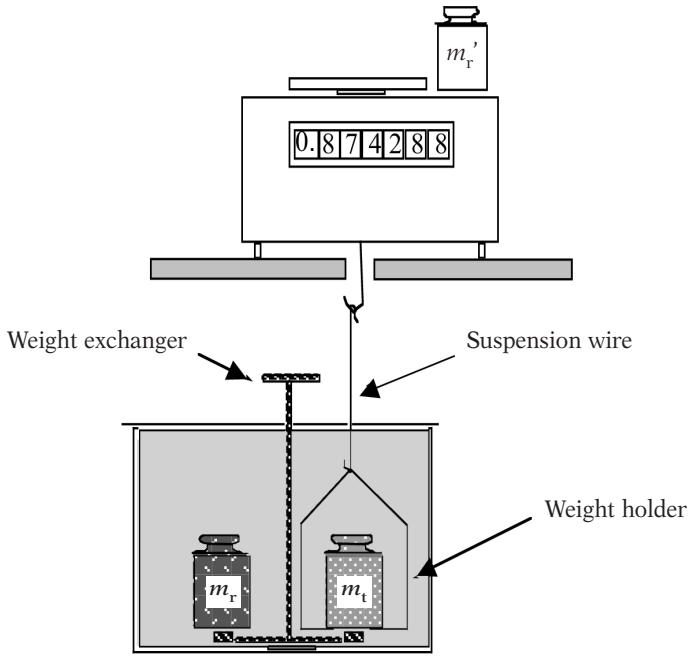

B.7.4.2 Test method A1 (two different reference weights weighed in air)

B.7.4.2.1 Measurement procedure

Determine the density of the liquid, ρ_l, and the air density, ρ_a, at the time of the test:

a) First weighing (test weight in air):
   1) Weigh test weight (m_{ta}) in air (of density ρ_a);
   2) Record indication (I_{ta});
   3) Remove weight (m_{ta}) carefully.

b) Second weighing (reference weight in air):
   1) Weigh reference weight (m_{ra}) in air (of density ρ_a);
   2) Record indication (I_{ra});
   3) Remove weight (m_{ra}) carefully.

c) Third weighing (test weight in liquid):
   1) Weigh test weight (m_{tl}) in the liquid bath (of density ρ_l);
   2) Record indication (I_{tl});
   3) Remove weight (m_{tl}) carefully.

d) Fourth weighing (second reference weight in air):
   1) Weigh reference weight (m_{rl}) in air (of density ρ_{al});
   2) Record indication (I_{rl});
   3) Remove weight (m_{rl}) carefully.

The second reference weight (m_{rl}) is usually a combination of weights for which the balance indication is close to the balance indication for the submersed weight.

B.7.4.2.2 Calculations

The symbol m_{rl} represents the total mass of the combination, and ρ_{rl} represents the effective density. The effective density is calculated by:

$$\rho_{rl} = \sum_i m_{rli} / \sum_i V_{rli} \qquad (B.7.4\text{-}1)$$

where V_{rli} are the volumes of the weights. The density of the test weight, ρ_t is then calculated by:

$$\rho_t = \frac{\rho_l (C_a m_{ra} + \Delta m_{wa}) - \rho_a (C_{al} m_{rl} + \Delta m_{wl})}{C_a m_{ra} + \Delta m_{wa} - C_{al} m_{rl} - \Delta m_{wl}} \qquad (B.7.4\text{-}2)$$

with:

$$C_a = 1 - \frac{\rho_a}{\rho_{ra}} \qquad (B.7.4\text{-}3) \qquad\qquad C_{al} = 1 - \frac{\rho_{al}}{\rho_{rl}} \qquad (B.7.4\text{-}4)$$

$$\Delta m_{wa} = (I_{ta} - I_{ra}) C_s \qquad (B.7.4\text{-}5) \qquad\qquad \Delta m_{wl} = (I_{tl} - I_{rl}) C_s \qquad (B.7.4\text{-}6)$$

$$C_s = 1 - \frac{\rho_{as}}{\rho_s} \qquad (B.7.4\text{-}7)$$

The symbol ρ_s represents the density of the sensitivity weight and ρ_{as} represents the air density at the time the balance was calibrated.

Relative uncertainty:

$$\left(\frac{u(\rho_t)}{\rho_t}\right)^2 = \left(c(\rho_a)\frac{u(\rho_a)}{\rho_a}\right)^2 + \left(c(\rho_{al})\frac{u(\rho_{al})}{\rho_{al}}\right)^2 + \left(\frac{u(\rho_l)}{\rho_l}\right)^2 + \left(c(\rho_{ra})\frac{u(\rho_{ra})}{\rho_{ra}}\right)^2 + \left(c(\rho_{rl})\frac{u(\rho_{rl})}{\rho_{rl}}\right)^2 + c^2(m_r)\left[\left(2\frac{u(m_r)}{m_r}\right)^2 + \left(\frac{u(\Delta m_{wa})}{m_{ra}}\right)^2 + \left(\frac{u(\Delta m_{wl})}{m_{rl}}\right) + \left(\frac{u(m_{cap})}{m_{rl}}\right)^2\right] \qquad (B.7.4\text{-}8)$$

with:

$$c(\rho_a) = -\frac{\rho_a}{\rho_t}\left(1 - \frac{\rho_t}{\rho_{ra}}\right)\left(1 - \frac{\rho_t}{\rho_l}\right) \text{ (negligibly small in most cases)} \qquad (B.7.4\text{-}9)$$

$$c(\rho_{al}) = \frac{\rho_{al}}{\rho_l \rho_{rl}}(\rho_l - \rho_t) \qquad (B.7.4\text{-}10) \qquad\qquad c(\rho_{ra}) = \frac{\rho_a}{\rho_l \rho_{ra}}(\rho_t - \rho_l) \qquad (B.7.4\text{-}11)$$

$$c(\rho_{rl}) = -c(\rho_{al}) = \frac{\rho_{al}}{\rho_l \rho_{rl}}(\rho_t - \rho_l) \qquad (B.7.4\text{-}12) \qquad\qquad |c(m_r)| = \frac{(\rho_t - \rho_l)}{\rho_l} \qquad (B.7.4\text{-}13)$$

$$\frac{u(m_r)}{m_r} = \frac{1}{2}\left(\frac{u(m_{ra})}{m_{ra}} + \frac{u(m_{rl})}{m_{rl}}\right) \qquad (B.7.4\text{-}14)$$

The masses and densities of the reference weights are assumed to be correlated.

$u(m_{cap})$ is the uncertainty due to the surface tension effect on the suspension wire (with a wire having a diameter of 1 mm, the maximum effect may be 23 mg; if the wire diameter is 0.1 mm, the effect may be 2.3 mg).

Near 20 °C, the uncertainty of water density is approximately related to the uncertainty of its temperature, t_l, in °C (temperature of water), as follows:

$$\left(\frac{u(\rho_l)}{\rho_l}\right)^2 = \left(-4.1 \times 10^{-3}\frac{u(t_l)}{t_l}\right)^2 \qquad (B.7.4\text{-}15)$$

Uncertainties down to 0.05 kg m^{-3} may be achieved with equation *(B.7.4-2)*.

In most cases, the buoyancy correction factors C_a, C_{al} and C_s do not differ significantly from each other and may be set to unity, thereby simplifying equation *(B.7.4-2)* as follows:

$$\rho_t = \frac{\rho_l(m_{ra} + \Delta m_{wa}) - \rho_a(m_{rl} + \Delta m_{wl})}{m_{ra} + \Delta m_{wa} - m_{rl} - \Delta m_{wl}} \qquad (B.7.4\text{-}16)$$

Relative uncertainty:

$$\left(\frac{u(\rho_t)}{\rho_t}\right)^2 = \left(c(\rho_a)\frac{u(\rho_a)}{\rho_a}\right)^2 + \left(\frac{u(\rho_l)}{\rho_l}\right)^2 + c^2(m_r)\left[\left(2\frac{u(m_r)}{m_r}\right)^2 + \left(\frac{u(\Delta m_{wa})}{m_{ra}}\right)^2 + \left(\frac{u(\Delta m_{wl})}{m_{rl}}\right) + \left(\frac{u(m_{cap})}{m_{rl}}\right)^2 + u_C^2\right] \qquad (B.7.4\text{-}17)$$

with: $\frac{u(m_r)}{m_r} = \frac{1}{2}\left(\frac{u(m_{ra})}{m_{ra}} + \frac{u(m_{rl})}{m_{rl}}\right)$ *(B.7.4-18)* $\quad c(\rho_a) = \frac{\rho_a}{\rho_t}\left(\frac{\rho_t}{\rho_l} - 1\right)$ *(B.7.4-19)*

$|c(m_r)| = \frac{(\rho_t - \rho_l)}{\rho_l}$ *(B.7.4-20)* $\quad u_C = \left(\frac{\rho_t}{\rho_l} - 1\right)\left(\frac{\rho_a}{\rho_{ra}} - \frac{\rho_{al}}{\rho_{rl}}\right)$ *(B.7.4-21)*

Uncertainties down to 0.2 kg m^{-3} may be achieved with equation *(B.7.4-16)*.

B.7.4.3 Method A2 (reference weights weighed in air and in the liquid)

B.7.4.3.1 Measurement procedure

The same as in B.7.4.2.1, except:

d) Fourth weighing (reference weight in liquid):
   1) Weigh reference weight (m_{rl}) in liquid;
   2) Record indication (I_{rl});
   3) Remove weight (m_{rl}) carefully.

The reference weight (m_{rl}) may be a second reference weight or the same as that used in air (m_{ra}).

B.7.4.3.2 Calculations

The density of the test weight, ρ_t, is then calculated by equation *(B.7.4-22)* or equation *(B.7.4-31)*.

i) When the same reference weight is used for air and liquid measurement, $m_{ra} = m_{rl} = m_r$ and $\rho_{ra} = \rho_{rl} = \rho_r$, then:

$$\rho_t = \frac{\rho_l(C_a m_r + \Delta m_{wa}) - \rho_a(C_l m_r + \Delta m_{wl})}{m_r\frac{\rho_l - \rho_a}{\rho_r} + \Delta m_{wa} - \Delta m_{wl}} \qquad (B.7.4\text{-}22)$$

with: $C_a = 1 - \frac{\rho_a}{\rho_r}$ *(B.7.4-23)* $\quad C_l = 1 - \frac{\rho_l}{\rho_r}$ *(B.7.4-24)*

Δm_{wa} and Δm_{wl} are defined as in equation *(B.7.4-2)*.

Relative uncertainty:

$$\left(\frac{u(\rho_t)}{\rho_t}\right)^2 = \left(c(\rho_a)\frac{u(\rho_a)}{\rho_a}\right)^2 + \left(c(\rho_l)\frac{u(\rho_l)}{\rho_l}\right)^2 + \left(\frac{u(\rho_r)}{\rho_r}\right)^2 + \left(c(m_r)\frac{u(m_r)}{m_r}\right)^2 + \left(c(\Delta m_{wa})\frac{u(\Delta m_{wa})}{m_{ra}}\right)^2 + \left(c(\Delta m_{wl})\frac{u(\Delta m_{wl})}{m_{ra}}\right)^2 + \left(c(\Delta m_{wl})\frac{u(m_{cap})}{m_{ra}}\right)^2 \qquad (B.7.4\text{-}25)$$

with: $c(\rho_a) = \frac{\rho_a}{\rho_t}\left(\frac{\rho_t - \rho_r}{\rho_l}\right)$ (negligibly small in most cases) *(B.7.4-26)*

$$c(\rho_t) = \frac{1}{\rho_t}\left(\rho_r\left(1 + \Delta m_{wa}/m_r\right) - \rho_t\right) \quad \text{(negligibly small in most cases)} \quad (B.7.4\text{-}27)$$

$$c(m_r) = \frac{\rho_r - \rho_t}{\rho_t} \quad (B.7.4\text{-}28) \qquad c(\Delta m_{wa}) = \frac{\rho_r}{\rho_t}\left(\frac{\rho_l - \rho_t}{\rho_l}\right) \quad (B.7.4\text{-}29)$$

$$c(\Delta m_{wl}) = \frac{\rho_r}{\rho_l} \quad (B.7.4\text{-}30)$$

Uncertainties down to 0.1 kg m^{-3} may be achieved with equation *(B.7.4-22)*.

ii) When different reference weights are used for air and liquid measurement, $m_{ra} \neq m_{rl}$ and $\rho_{ra} \neq \rho_{rl}$, then:

$$\rho_t = \frac{\rho_l\left(C_a m_{ra} + \Delta m_{wa}\right) - \rho_a\left(C_l m_{rl} + \Delta m_{wl}\right)}{C_a m_{ra} + \Delta m_{wa} - C_l m_{rl} - \Delta m_{wl}} \quad (B.7.4\text{-}31)$$

with: $C_a = 1 - \dfrac{\rho_a}{\rho_{ra}}$ *(B.7.4-32)* $\qquad C_l = 1 - \dfrac{\rho_l}{\rho_{rl}}$ *(B.7.4-33)*

Relative uncertainty:

$$\left(\frac{u(\rho_t)}{\rho_t}\right)^2 = \left(c(\rho_a)\frac{u(\rho_a)}{\rho_a}\right)^2 + \left(c(\rho_l)\frac{u(\rho_l)}{\rho_l}\right)^2 + \left(c(\rho_{ra})\frac{u(\rho_{ra})}{\rho_{ra}}\right)^2 + \left(c(\rho_{rl})\frac{u(\rho_{rl})}{\rho_{rl}}\right)^2 + c^2(m_r)\left[\left(2\frac{u(m_r)}{m_r}\right)^2 + \left(\frac{u(\Delta m_{wa})}{m_{ra}}\right)^2\right] + \left(c(\Delta m_{wl})\frac{u(\Delta m_{wl})}{m_{ra}}\right)^2 + \left(c(\Delta m_{wl})\frac{u(m_{cap})}{m_{ra}}\right)^2$$

(B.7.4-34)

with: $\dfrac{u(m_r)}{m_r} = \dfrac{1}{2}\left(\dfrac{u(m_{ra})}{m_{ra}} + \dfrac{u(m_{rl})}{m_{rl}}\right)$ *(B.7.4-35)*

$$c(\rho_a) = \frac{\rho_a}{\rho_t}\left[1 - \frac{\rho_{rl}}{\rho_{ra}\rho_l}\left(\rho_{ra} - \rho_t + \rho_l\right)\right] \quad \text{(negligibly small in most cases)} \quad (B.7.4\text{-}36)$$

$$c(\rho_l) = \frac{1}{\rho_t}\left(\rho_{rl} - \rho_t\right) \quad \text{(negligibly small in most cases)} \quad (B.7.4\text{-}37)$$

$$c(\rho_{ra}) = \frac{\rho_{rl}\rho_a}{\rho_l\rho_{ra}\rho_t}\left(\rho_l - \rho_t\right) \quad (B.7.4\text{-}38) \qquad c(\rho_{rl}) = \frac{\rho_t}{\rho_{rl}} \quad (B.7.4\text{-}39)$$

$$c(m_r) = \frac{\rho_{rl}}{\rho_l}\frac{\rho_l - \rho_t}{\rho_t} \quad (B.7.4\text{-}40) \qquad c(\Delta m_{wl}) = \frac{\rho_{rl}}{\rho_l} \quad (B.7.4\text{-}41)$$

Mass of the references weights are assumed to be correlated. For $u(m_{cap})$ see B.7.4.2.2.

Uncertainties down to 0.1 kg m^{-3} may be achieved with equation *(B.7.4-31)*.

B.7.4.4 Method A3 (direct weighing)

Instead of using a comparison technique, the procedure can be simplified by directly reading the balance indication.

B.7.4.4.1 Measurement procedure

The same as in B.7.4.2.1, except that procedures b) and d) are omitted.

B.7.4.4.2 Calculations

The corresponding equation governing this situation is:

$$\rho_t = \frac{I_{ta} \times \rho_l - I_{tl} \times \rho_a}{I_{ta} - I_{tl}} \qquad (B.7.4\text{-}42)$$

The prerequisite for this simplification is a well-calibrated balance. I_{ta} and I_{tl} mean the indicated balance values for the test weight in air (subscript "a") and liquid (subscript "l") respectively, after the balance has been tared without the weight on the pan or on the immersed holder.

Relative uncertainty:

$$\left(\frac{u(\rho_t)}{\rho_t}\right)^2 = \left(\frac{u(\rho_l)}{\rho_l}\right)^2 + \left(c(\rho_a)\frac{u(\rho_a)}{\rho_a}\right)^2 + \left(c(I_{ta})\frac{u(I_{ta})}{I_{ta}}\right)^2 + \left(c(I_{tl})\frac{u(I_{tl})}{I_{tl}}\right)^2 + \left(c(I_{tl})\frac{u(m_{cap})}{I_{tl}}\right)^2 + u_C^2 \qquad (B.7.4\text{-}43)$$

with:

$$c(\rho_a) = \rho_a \frac{\rho_t - \rho_l}{\rho_t \rho_l} \qquad (B.7.4\text{-}44)$$

$$c(I_{ta}) = \frac{\rho_l - \rho_t}{\rho_l} \qquad (B.7.4\text{-}45)$$

$$c(I_{tl}) = \frac{\rho_t - \rho_l}{\rho_l} \qquad (B.7.4\text{-}46)$$

$$u_C = \left(\frac{\rho_t}{\rho_l} - 1\right)\frac{\rho_a - \rho_{al}}{\rho_{ref}} \qquad (B.7.4\text{-}47)$$

Uncertainties down to 0.2 kg m^{-3} may be achieved with equation *(B.7.4-42)*.

B.7.5 Test method B (density verification)

B.7.5.1 Principles

Method B is a simplified form of the hydrostatic technique and involves only weighing in liquid. The test weight is suspended by a thin wire of sufficient strength in water of density ρ_l. The balance display indicates a mass value, I_{tl}.

This method can be performed in two different ways:

Method B1: Calculation of the density using equation *(B.7.5-1)* and associated uncertainty equation *(B.7.5-2)* (mandatory for class E_1).

Method B2: Verification that the density is within a prescribed range. The limiting values for the balance indication (R 111-2 *Test Report Format*) are calculated on the minimum and maximum limits for density that are given in Table 5 of this Recommendation. An estimated measurement uncertainty of the density determination method is taken into account depending on the weight size. As an additional safety measure, the minimum limits are based on an assumed water temperature of 24 °C, and the maximum limits are based on a temperature of 18 °C.

B.7.5.2 Apparatus

a) Laboratory balance(s) of suitable range. A relative resolution of 10^{-6} with a corresponding level of repeatability, is recommended;

b) Liquid bath of stable temperature in the range 18 °C to 24 °C. If the balance is equipped for weighing below the balance, it may be elevated on a support above the bath (see Figure B.4) or the bath may be placed on a support platform as shown in Figure B.5;

c) Carrier bracket which can be attached to the balance pan;

d) Weight holder(s) of different size(s) with appropriate suspension wire(s);

e) Reference weights for balance calibration;

f) Tools for handling weights (e.g. laboratory gloves, lint-free cloth, laboratory tweezers).

Figure B.5 Illustration of method B

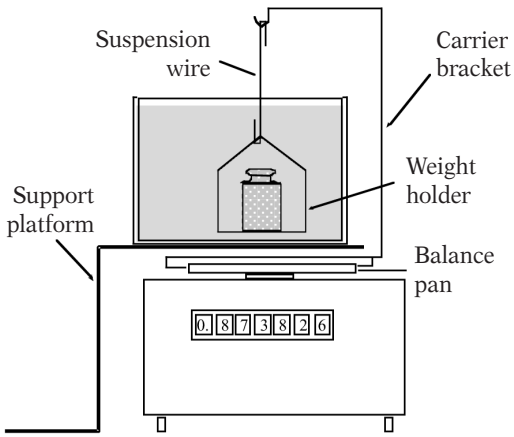

B.7.5.3 Measurement procedure

a) Immerse the weight (or set of weights) in a bath of distilled water which is at 18 °C to 24 °C. The bath may be placed on a support platform according to Figure B.5.

b) Attach the carrier bracket to the balance pan and suspend the weight holder from the carrier bracket by a thin suspension wire of sufficient strength, so that the weight holder is completely immersed. The water/air interface at the suspension wire must be well defined.

c) Tare the balance to read zero[6].

d) Remove air bubbles from the weight and place it on the holder.

e) Do not disturb the suspension wire, to avoid breaking the meniscus at the water surface.

f) When stable, read and record the balance indication, I_{tl}.

g) Using tweezers put the test weight back into its storage position.

h) Record the environmental conditions of the laboratory (air temperature, pressure and humidity) and the temperature of the liquid.

B.7.5.4 Results

B.7.5.4.1 Method B1

Calculation of density using the nominal mass, m_0, of the weight. The density is calculated according to:

$$\rho_t = \frac{\rho_l m_t}{m_t - I_{tl}\left(1 - \frac{\rho_a}{\rho_{ref}}\right)} \qquad (B.7.5\text{-}1)$$

Measurement uncertainty of Method B1:

$$\left(\frac{u(\rho_t)}{\rho_t}\right)^2 = \left(\frac{u(\rho_l)}{\rho_l}\right)^2 + \left(c(\rho_a)\frac{u(\rho_a)}{\rho_a}\right)^2 + \left(c(I_{tl})\frac{u(I_{tl})}{I_{tl}}\right)^2 + \left(c(m_t)\frac{u(m_t)}{m_t}\right)^2 + \left(c(I_{tl})\frac{u(m_{cap})}{I_{tl}}\right)^2 \qquad (B.7.5\text{-}2)$$

(6) Note: If the balance does not have a tare function, I_{tl} is the difference between the second and the first weighings.

with: $$c(m_t) = \frac{m_t(\rho_1 - \rho_t)}{\rho_t(m_t - I_{tl})} \quad (B.7.5\text{-}3)$$ $$c(\rho_a) = \frac{\rho_a I_{tl}}{\rho_{ref}(I_{tl} - m_t)} \quad (B.7.5\text{-}4)$$

$$c(I_{tl}) = \frac{I_{tl}}{m_t - I_{tl}} \quad (B.7.5\text{-}5)$$

$u(m_{cap})$ is the uncertainty due to the surface tension on the suspension wire (see also B.7.4.2.2).

The measurement uncertainty for method B1 is typically ± 5 kg m^{-3} or better for the larger weights, and up to ± 60 kg m^{-3} for a 1 g weight, depending on the size of the weight and the care in handling. The measurement uncertainty increases as the size of the weight decreases.

B.7.5.4.2 Method B2

The density, ρ_t, of the weight is verified by comparing the value of I_{tl} with two limiting values, $I_{tl(min)}$ and $I_{tl(max)}$, for the corresponding weight size. These limiting values are tabulated in R 111-2 *Test Report Format* for weight classes E_1 to F_1.

B.7.5.5 Recording results

Record the measurement results using the forms in R 111-2 *Test Report Format*, Density verification – Method B and Limit density values.

B.7.6 Test method C (Volume determination by weighing of the displaced liquid)

This method is not practical for weights of less than 1 g.

B.7.6.1 Principles

This method can be performed two ways:

1) The mass of the test weight is unknown; or
2) The mass of the test weight is known.

B.7.6.2 General considerations

Instead of measuring the buoyancy force acting on the weight in water, it is possible to determine the volume of liquid that is being displaced by the immersed weight. With the known mass of the test weight, m_t, its density can be calculated.

B.7.6.3 Apparatus

a) Laboratory balance(s) with a capacity in the range 200 g to 100 kg with a relative resolution of 10^{-5} or better and corresponding repeatability;
b) Liquid bath(s) of suitable size(s);
c) Stand with height adjustment to hold the weights hanging in water;
d) Suspension wire(s) and weight holder(s) of suitable size(s);
e) Tools for handling weights (e.g. laboratory gloves, lint-free cloth, laboratory tweezers);
f) A well-lit room.

B.7.6.4 Measurement procedure

Figure B.6 Illustration of method C

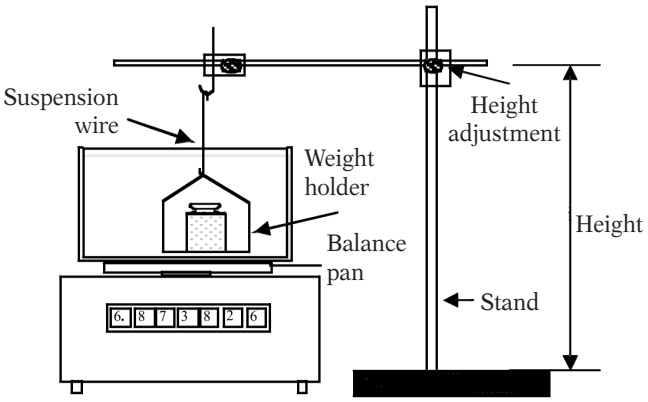

a) Place a container with water on the balance pan.

b) Suspend the weight holder and suspension wire from a separate stand.

c) Tare the balance, if this function is available. If not, read the indication, I_1.

d) Lift the holder above the water surface, place the weight on the holder and immerse it again.

e) Adjust the height in such a way that the suspension wire crosses the air/water interface at the same height as before.

f) Read the indication, I_{dl} (or I_2 if the balance does not have a tare function, $I_{dl} = I_2 - I_1$).

g) Record the environmental conditions of the laboratory, air temperature, pressure and humidity and the temperature of the liquid.

h) Determine the air density of the laboratory, ρ_a, and the density of the water bath, ρ_l, using equation *(E.3-1)* and Table B.6.

The displaced water mass, $V_t \rho_l$, is indicated by the weight value, I_{dl}. If necessary, extrapolate for the evaporation during the time since the last taring[7].

B.7.6.5 Calculations

The difference, I_{dl}, between the two readings equals the amount of displaced liquid weighed in air. If the mass, m_t, of the test weight is already known, the values I_{dl} and m_t are entered into equation *(B.7.6-1)* to calculate the density, ρ_t, of the test weight.

$$\rho_t = \frac{\left(1 - \frac{\rho_a}{\rho_l}\right) m_t \times \rho_l}{\left(1 - \frac{\rho_a}{\rho_{ref}}\right) \times I_{dl}} \qquad (B.7.6\text{-}1)$$

If m_t is not yet known, then the test weight is weighed on a balance, and the indicated value, I_{ta}, in air is used together with I_{dl}, in equation *(B.7.6-2)* to calculate the density, ρ_t.

$$\rho_t = \rho_a + (\rho_l - \rho_a)\frac{I_{ta}}{I_{dl}} \qquad (B.7.6\text{-}2)$$

(7) Read off several times to estimate the evaporation rate with time and correct for the time difference between taring and reading. Note that it is impractical to repeat method C as the weight should be dried before immersing in water again.

B.7.6.6 Measurement uncertainty of method C

For equation *(B.7.6-1)*:

$$u^2(\rho_t) = c^2(\rho_a)u^2(\rho_a) + c^2(\rho_l)u^2(\rho_l) + c^2(m_t)u^2(m_t) + c^2(I_{dl})u^2(I_{dl}) + c^2(I_{dl})u^2_{cap} \qquad (B.7.6\text{-}3)$$

with:

$$c(\rho_a) = \frac{\rho_t}{\rho_{ref}} - \frac{m_t}{I_{dl}} \qquad (B.7.6\text{-}4) \qquad\qquad c(\rho_l) = \frac{m_t}{I_{dl}} \qquad (B.7.6\text{-}5)$$

$$c(m_t) = \frac{\rho_l}{I_{dl}} \qquad (B.7.6\text{-}6) \qquad\qquad c(I_{dl}) = \frac{m_t \rho_l}{I_{dl}^2} \qquad (B.7.6\text{-}7)$$

For equation *(B.7.6-2)*:

$$u^2(\rho_t) = c^2(\rho_a)u^2(\rho_a) + c^2(\rho_l)u^2(\rho_l) + c^2(I_{ta})u^2(I_{ta}) + c^2(I_{dl})u^2(I_{dl}) + c^2(I_{dl})u^2_{cap} \qquad (B.7.6\text{-}8)$$

with:

$$c(\rho_a) = 1 - \frac{I_{ta}}{I_{dl}} \qquad (B.7.6\text{-}9) \qquad\qquad c(\rho_l) = \frac{I_{ta}}{I_{dl}} \qquad (B.7.6\text{-}10)$$

$$c(I_{ta}) = \frac{\rho_l}{I_{dl}} \qquad (B.7.6\text{-}11) \qquad\qquad c(I_{dl}) = -\frac{I_{ta}\rho_l}{I_{dl}^2} \qquad (B.7.6\text{-}12)$$

Within the range of 1 g ≤ m_t ≤ 1 kg, the measurement uncertainty is ± 100 kg m^{-3} to ± 10 kg m^{-3}, depending on the size of the weights and the care in handling. Before comparing the calculated density value, ρ_t, with the minimum and maximum limits for density in Table 5, the value of ρ_t shall be expanded with the uncertainty expected from this method or with an estimated uncertainty margin.

B.7.6.7 Recording results

Record the measurement results using the forms in R 111-2 *Test Report Format*, Density determination – Method C.

B.7.7 Test method D (Determination of the displaced liquid in a constant volume vessel)

B.7.7.1 Principle

Large weights are difficult to handle in hydrostatic weighing. An alternative way to determine their volume is by weighing the liquid they displace, in an indirect way, using a vessel of constant adjustable volume.

B.7.7.1.1 The vessel is filled with water to a well-defined level and weighed twice, once with and once without the weight inside the water. The corresponding balance indications are I_{l+t} and I_l. The neck of the container should not be larger than 1 cm, the water being kept at a uniform and stable temperature within ± 0.1 °C. Care should be taken that the volume of the weight is not too small in proportion to the capacity of the vessel, that the seal on the vessel does not leak, and that there is no trapped air. Given a constant liquid density, ρ_l, the density of the weight, ρ_t, is calculated from the difference ($I_{l+t} - I_l$) according to equation *(B.7.7-1)*, which is analogous to equation *(B.7.5-1)*.

$$\rho_t = \frac{m_0 \rho_l}{m_0 - (I_{l+t} - I_l)\left(1 - \frac{\rho_a}{\rho_{ref}}\right)} \qquad (B.7.7\text{-}1)$$

B.7.7.2 Apparatus

a) Laboratory balance(s) with a capacity in the range 5 kg to 100 kg and a relative resolution of 10^{-6} or better;

b) Transparent test vessel(s) of suitable design with precisely controllable fill level;

c) Tools for handling weights (e.g. laboratory gloves, lint-free cloth, laboratory tweezers); and

d) A well-lit room.

B.7.7.3 Measurement procedure

Figure B.7 Illustration of method D

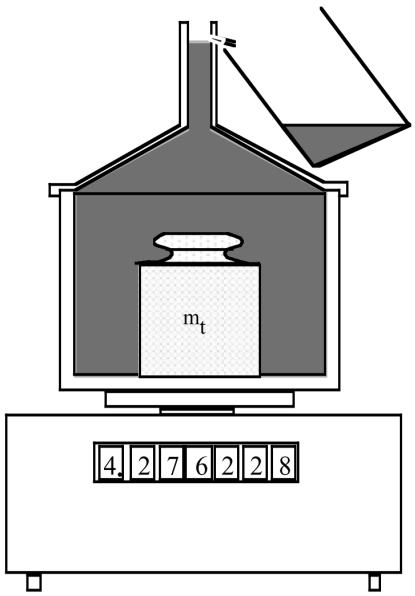

a) Place the weight in the vessel and fill it carefully with water to a well-defined level (for example until it flows over a spill gate).

b) Weigh the vessel with weight and liquid.

c) Read and record the indication, I_{l+t}.

d) Remove the weight and add water of the same temperature up to the same level. It is not necessary to know the volume if the water temperature is kept constant.

e) Weigh the vessel containing the liquid.

f) Read and record the indication, I_l.

g) The difference between the readings ($I_{l+t} - I_l$) is due to the mass of the weight minus the mass of the displaced water[8].

h) Record the environmental conditions of the laboratory (air temperature, pressure, humidity) and the temperature of the liquid.

i) Determine the air density of the laboratory, ρ_a, and density of the water bath, ρ_l, using equation *(E.3-1)* and Table B.6.

(8) If method D is repeated there is no need to dry the weight before immersing again.

B.7.7.4 Measurement uncertainty of method D

$$\left(\frac{u(\rho_t)}{\rho_t}\right)^2 = \left(c(\rho_a)\frac{u(\rho_a)}{\rho_a}\right)^2 + \left(c(m_t)\frac{u(m_t)}{m_t}\right)^2 + \left(\frac{u(\rho_l)}{\rho_l}\right)^2 + 2(c_I u_I)^2 + (c_I u_w)^2 \qquad (B.7.7\text{-}2)$$

with:

$$c(\rho_a) = \frac{\rho_a \rho_t (I_{t+1} - I_l)}{\rho_{ref}\, \rho_l m_t} \quad (B.7.7\text{-}3) \qquad c(m_t) = \frac{\rho_t - \rho_l}{\rho_l} \quad (B.7.7\text{-}4) \qquad c_I = \frac{\rho_t}{m_t \rho_l} \quad (B.7.7\text{-}5)$$

u_w is the uncertainty contribution due to the two water levels with and without the weight.

The uncertainty of this method is in the order of ± 15 kg m^{-3} or better for a 1 kg weight but reduces for larger weights provided that the neck of the container is very narrow, that the water is kept at a uniform and stable temperature within ± 0.1 °C, that the volume of the weight is not too small in proportion to the capacity of the vessel, that the seal on the vessel does not leak, and that there is no trapped air.

B.7.7.5 Recording results

Record the measurement results using the forms in R 111-2 *Test Report Format*, Density determination – Method D.

B.7.8 Test method E (volume determination by geometric measurement)

B.7.8.1 Principle

The volume of a weight can be calculated from its dimensions and appropriate formulae. The volume may be divided into several elementary components that also may include a cavity [27]. In the following, weights are considered that are shaped in accordance with Figure A.1 (here without a cavity, see Figure B.8). Standard formulae for the three relatively simple geometric forms of the knob, A, the ring, B, and the main body, C, are given [27]. In some cases the weight may have a recess, D, at its bottom. The calculation of the volume portions is straightforward.

B.7.8.1.1 Method E makes the immersion of a weight in water unnecessary, which is advantageous for weights with a cavity. However, there is a risk of scratching the surface during the measurement, and therefore, test method E should not be used on class E and F weights.

B.7.8.2 Apparatus

a) Vernier calipers, preferably with a resolution of 0.01 mm;

b) Micrometer (for small weights);

c) Radius gauge (alternatively use the values in Table A.1);

d) Tools for handling weights (e.g. laboratory gloves, lint-free cloth, laboratory tweezers); and

e) A well-lit room.

B.7.8.3 Measurement procedure

a) Measure the heights, diameters and radii and the dimensions of any cavity or indentation according to Figure B.8.

b) Calculate and add the volumes for parts A, B, C and D according to equations *(B.7.8-1)* to *(B.7.8-5)*.

c) Calculate the density from the mass and volume.

Figure B.8 Illustration of the volume determination of a cylindrical weight (see Table A.1)

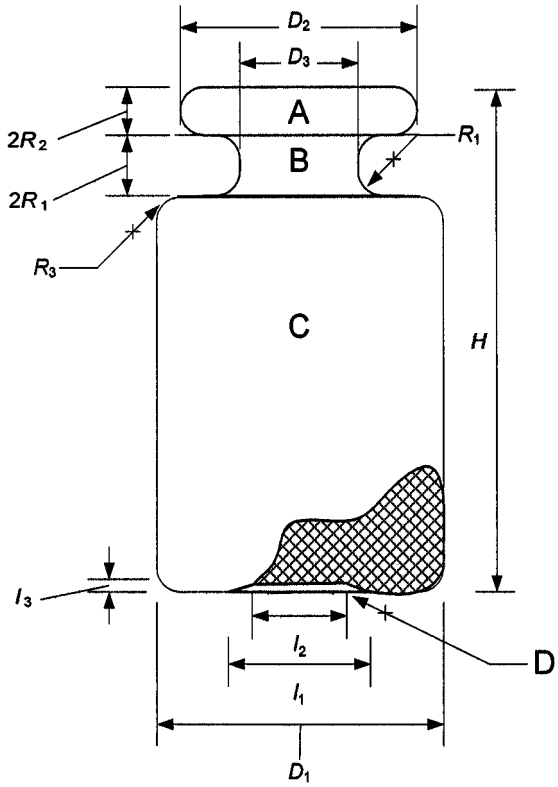

$$V_A = 2\pi R_2\left(\frac{D_2^2}{4} - R_2 D_2 + R_2^2 + \frac{\pi R_2 D_2}{4} - \frac{\pi R_2^2}{2} + \frac{2R_2^2}{3}\right) \qquad (B.7.8\text{-}1)$$

$$V_B = \pi R_1\left(\frac{D_3^2}{2} + 2R_1 D_3 - \frac{\pi R_1 D_3}{2} - \pi R_1^2 + \frac{10R_1^2}{3}\right) \qquad (B.7.8\text{-}2)$$

$$V_C = \pi\frac{D_1^2}{4}\left(H - 2(R_1 + R_2)\right) - \pi R_3^2\left(2D_1 - \frac{10R_3}{3} - \frac{\pi D_1}{2} + \pi R_3\right) \qquad (B.7.8\text{-}3)$$

$$V_D = \frac{1}{12} l_3\left(l_1^2 + l_1 l_2 + l_2^2\right) \qquad (B.7.8\text{-}4)$$

$$V_{weight} = V_A + V_B + V_C\left\{- V_D\right\} \qquad (B.7.8\text{-}5)$$

B.7.8.4 Measurement uncertainty of method E

The largest contribution to the uncertainty is due to the deviation of the actual shape from the mathematical model. For weights shaped in accordance with Annex A, the uncertainty range is from 30 kg m^{-3} for large weights to 600 kg m^{-3} for small ones. For weights with cavities or other shapes the uncertainty may be twice as large [25].

B.7.8.5 Recording results

Record the measurement results using the forms in R 111-2 *Test Report Format*, Density determination – Method E.

B.7.9 Test method F (estimation based on known composition)

B.7.9.1 Principle

Most weights are produced from one of a limited number of alloys. The precise value of the density depends on the relative proportion of the constituents of each alloy. Typical density ranges are given in Table B.7.

B.7.9.2 Method F1

If it is known that the supplier consistently uses the same alloy for a particular class of weights, and its density is known from previous tests, then the known density should be applied using an uncertainty of one third of that given in Table B.7 for the same alloy.

B.7.9.3 Method F2

Obtain the composition of the alloy from the supplier of the weight in question. Find the density value from a physics/chemistry handbook that has tables of density as a function of the concentration of alloying elements. Use the handbook density value and apply the uncertainty value from Table B.7. For class E_2 to M_2 weights the "assumed density" values in Table B.7 below are adequate. The density of class M_3 weights is usually of no concern.

Table B.7 Method F2 - List of alloys most commonly used for weights

Alloy/material	Assumed density	Uncertainty (k = 2)
Platinum	21 400 kg m^{-3}	± 150 kg m^{-3}
Nickel silver	8 600 kg m^{-3}	± 170 kg m^{-3}
Brass	8 400 kg m^{-3}	± 170 kg m^{-3}
Stainless steel	7 950 kg m^{-3}	± 140 kg m^{-3}
Carbon steel	7 700 kg m^{-3}	± 200 kg m^{-3}
Iron	7 800 kg m^{-3}	± 200 kg m^{-3}
Cast iron (white)	7 700 kg m^{-3}	± 400 kg m^{-3}
Cast iron (grey)	7 100 kg m^{-3}	± 600 kg m^{-3}
Aluminum	2 700 kg m^{-3}	± 130 kg m^{-3}

B.7.9.4 Calculations

B.7.9.4.1 Density of weights with an adjustment cavity

The adjustment of a weight with dense material inside a cavity may also influence the density of the weight. If alloy X (of density ρ_x) amounts to x percent, and the adjusting material Y (of density ρ_y) amounts to y percent of the final mass, then the density, ρ_t, can be calculated with the help of the following equation:

$$\rho_t = \frac{100}{\frac{x}{\rho_x} + \frac{y}{\rho_y}} \qquad (B.7.9\text{-}1)$$

B.7.9.4.2 Density of a composite weight

The same equation can also be used to determine the resulting density if two different constituents make up a weight or if two weights of different densities are used as a reference. The preferred metals for adjusting weights are tungsten (18 800 kg m^{-3} ± 200 kg m^{-3}), lead (11 300 kg m^{-3} ± 150 kg m^{-3}), molybdenum (10 000 kg m^{-3} ± 150 kg m^{-3}) and tin (7 kg m^{-3} ± 100 kg m^{-3}).

B.7.9.5 Recording results

Record the measurement results using the forms in R 111-2 *Test Report Format*, Density determination – Method F.

B.7.10 Recommended methods for density determination

Table B.8 Recommended methods for the density determination for class of weights

<table>
<tr><th>Weight</th><th>Class E_1</th><th>Class E_2</th><th>Class F_1</th><th>Classes F_2, M_1, M_2</th></tr>
<tr><td>5 000 kg</td><td rowspan="6"></td><td rowspan="2"></td><td rowspan="6">E, F</td><td rowspan="17">F</td></tr>
<tr><td>2 000 kg</td></tr>
<tr><td>1 000 kg</td><td rowspan="4">E, F</td></tr>
<tr><td>500 kg</td></tr>
<tr><td>200 kg</td></tr>
<tr><td>100 kg</td></tr>
<tr><td>50 kg</td><td rowspan="2">A, C, D</td><td rowspan="5">D, E, F</td><td rowspan="5">D, E, F</td></tr>
<tr><td>20 kg</td></tr>
<tr><td>10 kg</td><td rowspan="3">A, B1*, C, D</td></tr>
<tr><td>5 kg</td></tr>
<tr><td>2 kg</td></tr>
<tr><td>1 kg</td><td rowspan="4">A, B*, C</td><td rowspan="4">B, F</td><td rowspan="4">B, C, F</td></tr>
<tr><td>500 g</td></tr>
<tr><td>200 g</td></tr>
<tr><td>100 g</td></tr>
<tr><td>50 g</td><td rowspan="3">A, B1*</td><td rowspan="2">B, C, F</td></tr>
<tr><td>20 g</td><td rowspan="5">F</td></tr>
<tr><td>10 g</td></tr>
<tr><td>5 g</td><td rowspan="4">F</td></tr>
<tr><td>2 g</td><td rowspan="2">B*, F1</td></tr>
<tr><td>1 g</td></tr>
<tr><td>500 mg</td><td rowspan="5">F1</td><td rowspan="3"></td></tr>
<tr><td>200 mg</td><td rowspan="4"></td></tr>
<tr><td>100 mg</td></tr>
<tr><td>50 mg</td><td></td></tr>
<tr><td>20 mg</td><td></td></tr>
</table>

* When using Method B for class E_1 weights, the density value must be calculated from equation *(B.7.5-1)*.

Note 1: Density is usually of no concern for class M_3 weights.

Note 2: Cleaning must be repeated after the density measurement if the fluid used in the density system was not water (other fluids typically used [e.g. fluorocarbons] leave a residue that must be removed by cleaning with a solvent such as alcohol).

B.8 Assignment of an OIML R 111 (2004) class to old and/or special weights

B.8.1 Scope

This section applies to weights manufactured before 1994 (when OIML R 111 (1994) came into effect) ("pre 94" weights), or to weights that have a special design or non-standard nominal value because they are made for a unique application.

B.8.1.1 For "pre 94" and/or special weights, certain exceptions concerning shape and surface roughness are permissible, but are subject to the guidelines given in B.8.2 and B.8.3. Special consideration shall be given to old weights, particularly in cases where thorough documentation on the stability of the weights is available. Nevertheless, apart from the specific exceptions allowed under B.8.2 and B.8.3 below, all other requirements of R 111 still apply.

B.8.1.2 Under this section, old and/or special weights may be assigned one of the class designations E_1 to M_3. It is generally sufficient to classify a weight only once. Subsequent re-calibrations are subject to the tolerances and conditions for the respective class.

B.8.2 Exceptions concerning surface roughness

Paragraph 11.1.2 of this Recommendation states that:

> *"A visual examination may suffice except in case of doubt or dispute. In this case, the values given in Table 6 shall be used. The maximum surface roughness permitted for weights greater than 50 kg shall be twice the values specified in Table 6."*

In accordance with B.5.3.1.2.2 2), individual scratches are to be disregarded when making the roughness measurement.

For "pre 94" and/or special weights, the roughness shall be deemed acceptable if there is adequate documentation showing that the masses of the weights are stable, and if the surface roughness does not exceed twice the limit in Table 6 for the respective class.

B.8.3 Presentation

For "pre 94" and/or special weights, the requirements of clause 14 of this Recommendation are met if the class is marked on the case for the weights. This applies to classes E_1, E_2, F_1, F_2 and M_1. In accordance with 13.4.3, class M_1 weights are to be marked with either "M_1" or "M".

Annex C
Calibration of a weight or weight set
(Mandatory)

C.1 Scope

This section describes two methods for the determination of the conventional mass of weights in a weight set:

1) The direct comparison method; and

2) The subdivision/multiplication method, which applies only for a set of weights.

Three different weighing cycles are described, all of which are forms of substitution weighing intended for, but not limited to, single-pan balances.

Prior to mass determination, the density of the weights must be known with sufficient accuracy. In addition, the environmental conditions and the metrological characteristics of the weighing instruments used in the mass determination must be known with sufficient accuracy. Formulae for the determination of the conventional mass and its uncertainty are given.

C.2 General requirements

C.2.1 Environmental conditions

The calibration of weights should be performed at stable ambient conditions under ambient atmospheric pressure at temperatures close to room temperature [(1)]. Typical recommended values are given in Table C.1.

Table C.1 Ambient conditions during calibration (Typical values recommended for obtaining successful results)

Weight class	Temperature change during calibration [(2)]
E_1	± 0.3 °C per hour with a maximum of ± 0.5 °C per 12 hours
E_2	± 0.7 °C per hour with a maximum of ± 1 °C per 12 hours
F_1	± 1.5 °C per hour with a maximum of ± 2 °C per 12 hours
F_2	± 2 °C per hour with a maximum of ± 3.5 °C per 12 hours
M_1	± 3 °C per hour with a maximum of ± 5 °C per 12 hours

Weight class	Range of relative humidity (*hr*) of the air [(3)]
E_1	40 % to 60 % with a maximum of ± 5 % per 4 hours
E_2	40 % to 60 % with a maximum of ± 10 % per 4 hours
F	40 % to 60 % with a maximum of ± 15 % per 4 hours

Note 1: It is also important that the difference in temperature between the weights and the air inside the mass comparator is as small as possible. Keeping the reference weight and the test weight inside the mass comparator before and during the calibration can reduce this temperature difference.

Note 2: This is the change in the temperature of the laboratory. Thermal stabilization of balances and weights (see B.4.3) also requires an appropriate temperature stability of the laboratory for 24 hours before calibration.

Note 3: The upper limit is mainly important when storing the weights.

C.2.1.1 For E_1 and E_2 class weights, the temperature should be within 18 °C to 27 °C. The environmental conditions should be within the specifications of the weighing instrument.

C.2.1.2 If the air density deviates from 1.2 kg m^{-3} by more than 10 %, mass values should be used in calculations and the conventional mass should be calculated from the mass.

C.2.2 Weighing instrument

The metrological characteristics of the weighing instrument used should be known from earlier measurements and its resolution, linearity, repeatability and eccentricity (see C.6.4) should be such that the required uncertainty can be reached.

C.2.3 Reference weights

The reference weight should generally be of a higher class of accuracy (see 1.3.1) than the weight to be calibrated. In the calibration of weights of class E_1, the reference weight should have similar or better metrological characteristics (magnetic properties, surface roughness) than the weight to be calibrated.

C.2.3.1 5.2 and 5.3 shall be fulfilled.

C.3 Weighing designs

C.3.1 Direct comparison

Usually the test weight should be calibrated by comparison against one or more reference weights. In each comparison, the nominal mass of the test weight and the reference weight should be equal. A check standard (see 2.5) can be used to monitor the measurement process [28].

Note: **Special problems may arise when calibrating class E_1 weights of less than one gram.** This is partially due to a relatively large uncertainty of the reference weights in this range. Further, the instability of the weighing instruments and a large surface area are factors that negatively influence the uncertainty of measurement. Therefore, the subdivision method is strongly recommended for such weights.

C.3.2 Subdivision

An entire set of weights can be calibrated against one or more reference weights [29, 30, 31, 32]. This method requires several weighings within each decade in the set. In these weighings, different combinations of weights of equal total nominal mass are compared. This method is mainly used to calibrate sets of class E_1 weights when the highest accuracy is required. If with this method, only one reference weight is used, the number of weighing equations should be larger than the number of unknown weights and an appropriate adjustment calculation should be performed in order to avoid propagating errors. If more than one reference weight is used, the number of equations may be equal to the number of unknown weights. In this case, no adjustment calculation is necessary. The advantage of such methods lies in the fact that they include a certain redundancy that offers greater confidence in the results. However, these methods, particularly the adjustment calculation, require more advanced mathematics [29, 30]. A typical weighing design for a set of masses of 5, 2, 2*, 1, 1* ($\times 10^n$ g) is [30, 31]:

Table C.2 Typical weighing design

Reference weight	vs	5 + 2 + 2* + 1
Reference weight	vs	5 + 2 + 2* + 1*
5	vs	2 + 2* + 1
5	vs	2 + 2* + 1*
2 + 1	vs	2* + 1*
2 + 1	vs	2* + 1*
2 + 1*	vs	2* + 1
2 + 1*	vs	2* + 1
2	vs	1 + 1*
2	vs	1 + 1*
2*	vs	1 + 1*
2*	vs	1 + 1*

In this example, the reference weight should have a nominal value of 10 ($\times 10^n$ g). Where 2* can be any combination of masses combined to have a nominal value of 2. The weight 1* can be a combination of weights 0.5 + 0.2 + 0.2* + 0.1 ($\times 10^n$ g) or it can be a check standard (see 2.5). Some comparisons have been duplicated to simplify calculations. The above weighing design is normally applied only if the same weighing instrument is used in all comparisons.

C.4 Weighing cycles

Accepted procedures for three different weighing cycles for a single comparison weighing are described below in C.4.1 and C.4.2.

Note: Other procedures and weighing cycles may be used. If in particular, weighing cycles are used that are not independent from each other, such as A_1 B_2 A_2, A_2 B_2 A_3, ..., the uncertainty has to be evaluated by considering covariance terms and the formula given in C.6.1 has to be modified correspondingly [33].

In the weighing cycles, "A" represents weighing the reference weight and "B" represents weighing the test weight. The cycles ABBA and ABA are normally used when calibrating class E and F weights.

The cycle $AB_1...B_nA$ is often used when calibrating class M weights, but generally not recommended for class E and F weights. If, however, a mass comparator with an automatic weight exchange mechanism is used and if the system is installed in a protecting housing, this cycle can also be accepted for class E and F weights calibrations.

Only cycles ABBA and ABA are useful in subdivision weighing. More than one reference weight can be used, in this case the weighing cycle can be applied for each reference weight separately. The reference weights may then be compared against one another.

C.4.1 Comparison of the test weight with one reference weight (recommended for class E and F weights)

A variety of weighing cycles can be utilized [34]. For two weights the following cycles, which are best known as ABBA and ABA, are possible. These cycles eliminate linear drift.

Cycle ABBA ($r_1t_1t_2r_2$): $I_{r1\,1}, I_{t1\,1}, I_{t2\,1}, I_{r2\,1}, ..., I_{r1\,n}, I_{t1\,n}, I_{t2\,n}, I_{r2\,n}$

$$\Delta I_i = (I_{t1\,i} - I_{r1\,i} - I_{r2\,i} + I_{t2\,i})/2 \qquad (C.4.1\text{-}1)$$

where $i = 1, \ldots, n$

Cycle ABA ($r_1t_1r_2$): $I_{r1\,1}, I_{t1\,1}, I_{r2\,1}, ..., I_{r1\,n}, I_{t1\,n}, I_{r2\,n}$

$$\Delta I_i = I_{t1\,i} - (I_{r1\,i} + I_{r2\,i})/2 \qquad (C.4.1\text{-}2)$$

where $i = 1, \ldots, n$

In cycles ABBA and ABA, n is the number of sequences. The i values are given in the order in which the weights should be placed on the weighing pan. Here the subscripts "r" and "t" denote the reference weight and test weight respectively. ΔI_i is the indication difference from measurement sequence i.

C.4.1.1 The time interval between weighings should be kept constant.

C.4.1.2 If there is a need to determine the sensitivity of the weighing instrument during the weighing process, the sequence ABBA can be modified to the form I_r, I_t, I_{t+ms}, I_{r+ms}, where "m_s" is the sensitivity weight.

C.4.2 Comparison of several test weights of the same nominal mass with one reference weight (cycle $AB_1 \ldots B_nA$). If several test weights t(j) ($j = 1, ..., J$) with the same nominal mass are to be calibrated simultaneously the weighing cycle ABA can be modified into $AB_1 \ldots B_nA$ as follows:

Cycle $AB_1 \ldots B_nA$: $I_{r1\,1}, I_{t(1)\,1}, I_{t(2)\,1}, ..., I_{t(J)\,1}, I_{r2\,1}, I_{r1\,2}, I_{t(J)\,2}, I_{t(J-1)\,2}, ..., I_{t(1)\,2}, I_{r2\,2}, \ldots$

$\{I_{r1\,i-1}, I_{t(1)\,i-1}, I_{t(2)\,i-1}, ..., I_{t(J)\,i-1}, I_{r2\,i-1}, I_{r1\,i}, I_{t(J)\,i}, I_{t(J-1)\,i}, ..., I_{t(1)\,i}, I_{r2\,i}\}$

where $i = 1, \ldots, n$

$$\Delta I_{i\,(j)} = I_{t(j)\,i} - (I_{r1\,i} + I_{r2\,i})/2 \qquad (C.4.2\text{-}1)$$

where $i = 1, \ldots, n$

If the drift in weighing indication is negligible, i.e. less than or equal to one third of the required uncertainty, it is not necessary to invert the order of the test weights in $AB_1 \ldots B_nA$ when repeating the sequence.

The number of weights should normally not be more than 5 ($J \leq 5$).

C.4.3 Number of weighing cycles

The number of weighing cycles, n, should be based on the required uncertainty and on the repeatability and reproducibility of the measurements. The minimum number of measurements to be made for classes E_1 to M_3 is given in Table C.3.

Table C.3 Minimum number of weighing cycles

Class	E_1	E_2	F_1	F_2	M_1, M_2, M_3
Minimum number of ABBA	3	2	1	1	1
Minimum number of ABA	5	3	2	1	1
Minimum number of $AB_1 \ldots B_nA$	5	3	2	1	1

C.5 Data analysis

C.5.1 Average difference of conventional mass - one test weight

For cycles ABBA and ABA, the conventional mass difference, Δm_c, between the test weight and the reference weight of a cycle, i, is:

$$\Delta m_c = m_{ct} - m_{cr} \qquad (C.5.1\text{-}1)$$

$$\Delta m_{ci} = \Delta I_i + m_{cr} C_i \qquad (C.5.1\text{-}2)$$

where: $$C_i = (\rho_{ai} - \rho_0) \times \left(\frac{1}{\rho_t} - \frac{1}{\rho_r} \right) \qquad (C.5.1\text{-}3)$$

The average difference of conventional mass for n cycles is:

$$\overline{\Delta m_c} = \frac{1}{n} \sum_{i=1}^{n} \Delta m_{ci} \qquad (C.5.1\text{-}4)$$

C.5.1.1 If the density, ρ_t or ρ_r, of a weight is not known, but the material is known, the appropriate assumed density from Table B.7 should be used. If it is only known that the density of a weight is within the allowed limits, then the value 8 000 kg m^{-3} should be used.

C.5.1.2 In cases where air buoyancy correction is estimated to be negligible, i.e. if $|C_i| \leq \frac{1}{3} \frac{U}{m_0}$ *(C.5.1-5)*

the term $m_0 C_i$ can be omitted. However, the uncertainty contribution of C may not be negligible (see below in C.6.3.1). If only an averaged or single value of the air density is available, the buoyancy correction, $m_{cr}C$, can be applied after averaging.

C.5.2 Average difference of conventional mass – Several test weights

If several test weights are calibrated according to weighing cycle $AB_1 \ldots B_n A$, the average mass difference for weight j is obtained from equation *(C.5.1-4)* by replacing ΔI_i with $\Delta I_{i(j)}$ in equation *(C.5.1-2)*.

C.5.3 Average difference of conventional mass – Several series of measurements

If there are several (J) identical series of measurements with average values $\overline{\Delta m_{cj}}$ and with approximately equal standard deviations the average value of all measurements is:

$$\overline{\Delta m_c} = \frac{1}{J} \sum_{j=1}^{J} \overline{\Delta m_{cj}} \qquad (C.5.3\text{-}1)$$

C.5.3.1 Several series of measurements are usually performed only in calibration of class E weights, when the reproducibility of weighings has to be investigated.

C.5.4 Conventional mass of the test weight

The conventional mass of the test weight can be calculated from the formula:

$$m_{ct} = m_{cr} + \overline{\Delta m_c} \qquad (C.5.4\text{-}1)$$

C.5.4.1 In verification, the conventional mass of the reference weight is not always known. In this case, its nominal value should be used.

C.6 Uncertainty calculations

The uncertainty calculations are based on the *Guide to the expression of uncertainty in measurement* 1993(E) [7] and the corresponding European cooperation for Accreditation (EA) document [35]. In References [28, 29, 30, 31 and 36] uncertainty calculations are applied for mass comparisons. The uncertainty is evaluated either by the Type A or by the Type B method of evaluation. Type A evaluation is based on a statistical analysis of a series of measurements whereas Type B evaluation is based on other knowledge.

C.6.1 Standard uncertainty of the weighing process, u_w (Type A)

The standard uncertainty of the weighing process, $u_w(\overline{\Delta m_c})$, is the standard deviation of the mass difference. For n cycles of measurements:

$$u_w\left(\overline{\Delta m_c}\right) = \frac{s\left(\Delta m_{ci}\right)}{\sqrt{n}} \qquad (C.6.1\text{-}1)$$

where $s(\Delta m_{ci})$ is defined below for the various classes of weights.

C.6.1.1 For classes F_2, M_1, M_2 and M_3, cycles ABBA, ABA or $AB_1 \ldots B_n A$ are often applied. For these classes of weights, if the standard deviation of mass difference measurements is not known from historical data, it can be estimated as:

$$s\left(\Delta m_c\right) = \frac{\max\left(\Delta m_{ci}\right) - \min\left(\Delta m_{ci}\right)}{2 \times \sqrt{3}} \qquad (C.6.1\text{-}2)$$

from $n \geq 3$ cycles of measurements.

The standard deviation can also be calculated as described in C.6.1.2.

C.6.1.2 For weight classes E_1, E_2 and F_1, the variance of the mass difference, Δm_c, of the weighing process, $s^2(\Delta m_c)$, is estimated from n cycles of measurements by:

$$s^2\left(\Delta m_c\right) = \frac{1}{n-1} \sum_{i=1}^{n} \left(\Delta m_{ci} - \overline{\Delta m_c}\right)^2 \qquad (C.6.1\text{-}3)$$

with n–1 degrees of freedom.

C.6.1.3 If only a few measurements are made, the estimate of $s(\Delta m_c)$ can be unreliable. A pooled estimate, obtained from earlier measurements made under similar conditions, should be used (see D.1.2). If this is not possible, n should not be less than 5.

C.6.1.4 In the case where there are J series of measurements (where $J > 1$), the variance of Δm_c is calculated by pooling over the J series so that:

$$s^2\left(\Delta m_c\right) = \frac{1}{J} \sum_{j=1}^{J} s_j^2\left(\Delta m_{ci}\right) \qquad (C.6.1\text{-}4)$$

with $J(n-1)$ degrees of freedom (D.2).

Note: The subscript "j" is appended to $s_j^2(\Delta m_c)$ to differentiate between the standard deviations for each series.

C.6.2 Uncertainty of the reference weight, $u(m_{cr})$ (Type B)

The standard uncertainty, $u(m_{cr})$, of the mass of the reference weight should be calculated from the calibration certificate by dividing the quoted expanded uncertainty, U, by the coverage factor, k (usually $k = 2$), and should be combined with the uncertainty due to the instability of the mass of the reference weight, $u_{inst}(m_{cr})$.

$$u(m_{cr}) = \sqrt{\left(\frac{U}{k}\right)^2 + u_{inst}^2(m_{cr})} \qquad (C.6.2\text{-}1)$$

The uncertainty due to instability of the reference weight, $u_{inst}(m_{cr})$, can be estimated from observed mass changes after the reference weight has been calibrated several times. If previous calibration values are not available, the estimation of uncertainty has to be based on experience.

C.6.2.1 If a verified weight of F_1 or lower accuracy class is used as a reference weight and it has an OIML R 111 certificate of conformity which does not state its mass and uncertainty, the uncertainty can be estimated from the maximum permissible error, δm of that specific class:

$$u(m_{cr}) = \sqrt{\frac{\delta m^2}{3} + u_{inst}^2(m_{cr})} \qquad (C.6.2\text{-}2)$$

C.6.2.2 If a combination of reference weights is used for a mass comparison and their covariances are not known, a correlation coefficient of 1 can be assumed [37]. This will lead to linear summation of uncertainties:

$$u(m_{cr}) = \Sigma_i\, u(m_{cr\,i}) \qquad (C.6.2\text{-}3)$$

where $u(m_{cr\,i})$ is the standard uncertainty of reference weight i. This is an upper limit for the uncertainty.

C.6.3 Uncertainty of the air buoyancy correction, u_b (Type B)

The uncertainty of the air buoyancy correction can be calculated from equation *(C.6.3-1)* [38].

$$u_b^2 = \left[m_{cr}\frac{(\rho_r - \rho_t)}{\rho_r \rho_t} u(\rho_a)\right]^2 + [m_{cr}(\rho_a - \rho_0)]^2 \frac{u^2(\rho_t)}{\rho_t^4} + m_{cr}^2(\rho_a - \rho_0)[(\rho_a - \rho_0) - 2(\rho_{al} - \rho_0)]\frac{u^2(\rho_r)}{\rho_r^4} \qquad (C.6.3\text{-}1)$$

where ρ_{al} is the air density during the (previous) calibration of the reference weight by use of a higher order reference weight. When using equation *(C.6.3-1)* be sure to use the same value for the uncertainty of the density of the reference weight, $u(\rho_r)$, that was used in the uncertainty calculation of the previous calibration. A larger uncertainty cannot be arbitrarily chosen.

C.6.3.1 Even if the air buoyancy correction is negligible (see C.5.1.2), the uncertainty contribution of the buoyancy effect may not be negligible, and shall be taken into account, if $u_b \geq u_c / 3$ (see equation *(C.6.3-1)*).

C.6.3.2 For classes M_1, M_2 and M_3, the uncertainty due to air buoyancy correction is negligible and can usually be omitted.

C.6.3.3 For classes F_1 and F_2, the densities of the weights have to be known with sufficient accuracy (see Table 5).

C.6.3.4 If the air density is not measured and the average air density for the site is used, then the uncertainty for the air density is to be estimated as:

$$u(\rho_a) = \frac{0.12}{\sqrt{3}} \quad [\text{kg m}^{-3}] \qquad (C.6.3\text{-}2)$$

A lower value of uncertainty may be used if supporting data can be provided.

At sea level the density of air should be assumed to be 1.2 kg m^{-3}.

C.6.3.5 For class E weights, the density of air should be determined. Its uncertainty is usually estimated from the uncertainties for temperature, pressure and air humidity. For class E_1, the CIPM formula (1981/91) [3] or an approximation can be used for the calculation of air density (see Annex E).

C.6.3.6 The variance of the air density is:

$$u^2(\rho_a) = u_F^2 + \left(\frac{\partial \rho_a}{\partial p} u_p\right)^2 + \left(\frac{\partial \rho_a}{\partial t} u_t\right)^2 + \left(\frac{\partial \rho_a}{\partial hr} u_{hr}\right)^2 \qquad (C.6.3\text{-}3)$$

At relative humidity of hr = 0.5 (50 %), a temperature of 20 °C and a pressure of 101 325 Pa, the following numerical values apply approximately:

u_F = [uncertainty of the formula used] (for CIPM formula: $u_F = 10^{-4}\ \rho_a$)

$$\frac{\partial \rho_a}{\partial p} = 10^{-5}\ \rho_a\ \mathrm{Pa}^{-1}$$

$$\frac{\partial \rho_a}{\partial t} = -\ 3.4 \times 10^{-3}\ \mathrm{K}^{-1}\ \rho_a$$

$$\frac{\partial \rho_a}{\partial hr} = -\ 10^{-2}\ \rho_a$$

where hr = relative humidity, as a fraction.

C.6.3.7 The density of the reference weight, ρ_r, and its uncertainty should be known from its calibration certificate.

C.6.3.8 For class E_2 weights, the density, ρ_t, is not always known, so it must be either measured or taken from Table B.7 in B.7.9.3.

C.6.4 Uncertainty of the balance u_{ba} (Type B)

C.6.4.1 Uncertainty due to the test of balances and mass comparators

The recommended approach to determine this component is to test the balances and mass comparators at reasonable time intervals and use the results from the test in the uncertainty calculations. When calibrating class E_1 weights, it is recommended to perform several test measurements at different times to ensure that there is enough information about the uncertainty at the time of the measurement.

C.6.4.2 Uncertainty due to the sensitivity of the balance

If the balance is calibrated with a sensitivity weight (or weights) of mass m_s, and of standard uncertainty $u(m_s)$, the uncertainty contribution due to sensitivity is:

$$u_s^2 = \left(\overline{\Delta m_c}\right)^2 \left(\frac{u^2(m_s)}{m_s^2} + \frac{u^2(\Delta I_s)}{\Delta I_s^2}\right) \qquad (C.6.4\text{-}1)$$

Where: ΔI_s is the change in the indication of the balance due to the sensitivity weight;
$u(\Delta I_s)$ is the uncertainty of ΔI_s; and
$\overline{\Delta m_c}$ is the average mass difference between the test weight and the reference weight.

If the sensitivity is not constant with time, temperature and load, its variation must be included in the uncertainty.

C.6.4.3 Uncertainty due to the display resolution of a digital balance

For a digital balance with the scale interval, d, the uncertainty due to resolution is:

$$u_{\mathrm{d}} = \left(\frac{d/2}{\sqrt{3}}\right) \times \sqrt{2} \qquad (C.6.4\text{-}2)$$

The factor √2 comes from the two readings, one with the reference weight and one with the test weight.

C.6.4.4 Uncertainty due to eccentric loading

If this contribution is known to be significant, the magnitude must be estimated and if necessary the contribution must be included in the uncertainty budget.

C.6.4.4.1 Acceptable solution for the uncertainty due to eccentricity:

$$u_{\mathrm{E}} = \frac{\frac{d_1}{d_2} \times D}{2 \times \sqrt{3}} \qquad (C.6.4\text{-}3)$$

Where: D is the difference between maximum and minimum values from the eccentricity test performed according to OIML R 76-2;

d_1 is the estimated distance between the centers of the weights; and

d_2 is the distance from the center of the load receptor to one of the corners.

In most cases, the uncertainty contribution u_{E} is already covered by the uncertainty u_w of the weighing process (see 6.1) and may be neglected.

C.6.4.4.2 When using balances with an automatic weight exchange mechanism, the indication difference, ΔI, between two weights may be different when the positions are interchanged: $\Delta I_1 \neq \Delta I_2$. This may be interpreted as an eccentric loading error and the corresponding uncertainty should be estimated using equation *(C.6.4-4)*. This uncertainty contribution is applicable, if it is known from previous interchanging measurements with weights of the same nominal value. In cases when the interchange is performed during a calibration procedure, the average of the two indication differences shall be taken as the weighing result and u_{E} can be neglected.

$$u_{\mathrm{E}} = \frac{|\Delta I_1 - \Delta I_2|}{2} \qquad (C.6.4\text{-}4)$$

Note: Equation *(C.6.4-4)* is based on the same mathematical background as equation *(15)* and Note 6 in OIML D 28.

C.6.4.5 Uncertainty due to magnetism, u_{ma}

If a weight has a high magnetic susceptibility and/or is magnetized, the magnetic interaction can often be reduced by placing a non-magnetic spacer between the weight and the load receptor. If the weights satisfy the requirements of this Recommendation, the uncertainty due to magnetism, u_{ma}, may be assumed to be zero.

C.6.4.6 Combined standard uncertainty of the balance, u_{ba}

The uncertainty components are added quadratically as follows:

$$u_{\mathrm{ba}} = \sqrt{u_{\mathrm{s}}^2 + u_{\mathrm{d}}^2 + u_{\mathrm{E}}^2 + u_{\mathrm{ma}}^2} \qquad (C.6.4\text{-}5)$$

C.6.5 Expanded uncertainty, $U(m_{\mathrm{ct}})$

The combined standard uncertainty of the conventional mass of the test weight is given by:

$$u_{\mathrm{c}}(m_{\mathrm{ct}}) = \sqrt{u_{\mathrm{w}}^2(\overline{\Delta m_{\mathrm{c}}}) + u^2(m_{\mathrm{cr}}) + u_{\mathrm{b}}^2 + u_{\mathrm{ba}}^2} \qquad (C.6.5\text{-}1)$$

If the buoyancy correction, $m_{cr}C$, is not applied (C.5.1.2), a corresponding contribution for buoyancy has to be added to the combined uncertainty in addition to u_b (see equation (15) and Note 6 in [3]):

$$u_c(m_{ct}) = \sqrt{u_w^2(\overline{\Delta m_c}) + u^2(m_{cr}) + u_b^2 + (m_{cr}C)^2 + u_{ba}^2} \qquad (C.6.5\text{-}2)$$

The expanded uncertainty, U, of the conventional mass of the test weight is as follows:

$$U(m_{ct}) = k\, u_c(m_{ct}) \qquad (C.6.5\text{-}3)$$

C.6.5.1 Usually the coverage factor, $k = 2$, should be used. However, if a pooled standard deviation of the weighing process is not known and the number of measurements cannot reasonably be increased up to 10 (as for very large weights and long weighing procedures), and the uncertainty, $u_w(\overline{\Delta m})$, is the dominant component in the uncertainty analysis, i.e. $u_w(\overline{\Delta m}) > u_c(m_t) / 2$, then the coverage factor, k, should be calculated from the t-distribution assuming a 95.5 % confidence level and the effective degrees of freedom, ν_{eff} (as calculated from the Welch-Satterthwaite formula [35]). The coverage factor, k, for different effective degrees of freedom, ν_{eff}, is given in Table C.4 below. If it can be assumed that the type B uncertainty estimates are conservative with infinite degrees of freedom, the formula has the form:

$$\nu_{eff} = (n-1) \times \frac{u_c^4(m_{ct})}{u_w^4(\overline{\Delta m_c})} \qquad (C.6.5\text{-}4)$$

For more details see [8].

Table C.4 Coverage factor, k, for different effective degrees of freedom, ν_{eff}

ν_{eff}	1	2	3	4	5	6	8	10	20	∞
k	13.97	4.53	3.31	2.87	2.65	2.52	2.37	2.28	2.13	2.00

Annex D
Statistical control
(Informative)

D.1 Check standard

D.1.1 A check standard is usually a weight of the same type and nominal mass as the test weight to be calibrated and is included in the weighing design as an 'unknown' weight. The control procedure works best with weighing designs where the check standard can easily be incorporated into the design as an unknown weight. For example, for test weights in denominations of 5, 2, 2, 1, a check standard of denomination "1" would be included in the weighing design so that the weight to be calibrated would be 5, 2, 2, 1, 1 weights. For kilogram weights that are calibrated against two reference kilograms in a 1, 1, 1, 1 design, the check standard (see 2.5) can be the difference between the two reference kilograms.

D.1.2 The purpose of the check standard is to assure the goodness of individual calibrations. A history of values on the check standard is required for this purpose. The accepted value of the mass difference, $\overline{m}_{\text{diff}}$, for the check standard (usually an average) is computed from the historical data and is based on at least 10–15 measurements. The value of the check standard for any new calibration, m_{diff}, is tested for agreement with the accepted value using a statistical control technique. The test is based on the t-statistic:

$$t = \frac{\left| m_{\text{diff}} - \overline{m}_{\text{diff}} \right|}{S} \qquad (D.1.2\text{-}1)$$

Where: S is the standard deviation of n historical values of the mass difference, which is estimated with $v = n-1$ degrees of freedom by:

$$S = \sqrt{\frac{1}{n-1} \sum_{i=1}^{n} \left(m_{\text{diff}_i} - \overline{m}_{\text{diff}} \right)^2} \qquad (D.1.2\text{-}2)$$

The calibration process is judged to be in control if:

$t \leq$ critical value of Student's t-distribution with v degrees of freedom.

D.1.3 Critical values, which depend on the degrees of freedom in S, are shown in Table D.1 for a two-sided test at the $\alpha = 0.05$ significance level. If the degrees of freedom are large (> 15), it is acceptable to use the factor 2 instead of the critical value from the table. If the calibration is judged to be out of control from the t-test, then the cause must be investigated and rectified before calibration results can be reported. This test is powerful for spotting anomalies or abrupt shifts in the mean of the process, including changes in the value of the reference weight, of the order of two or more standard deviations. It is not effective for guarding against small changes of the order of half to one standard deviation, nor against gradual drift.

D.1.4 The accepted value of the check standard is updated as data on it are accumulated. Several approaches could be followed, however the data should always be plotted and examined for drift or change. The check standard value has changed from its "old" value, $\overline{m}_{\text{diff}}$ to a "new" value, $\overline{m}'_{\text{diff}}$, based on the most recent 10–15 measurements, if:

$$t = \frac{\left| \overline{m}_{\text{diff}} - \overline{m}'_{\text{diff}} \right|}{\sqrt{\frac{s^2_{\text{old}}}{J} - \frac{s^2_{\text{new}}}{K}}} > t_{\alpha/2}(v) \qquad (D.1.4\text{-}1)$$

Where J and K are the number of "old" and "new" measurements respectively, and $v = J + K - 2$.

D.2 Precision of the balance

The precision of the balance can also be monitored using a statistical control technique. The residual standard deviation from a weighing design or a standard deviation of repeated measurements on a single weight is the basis for the test. Again, the test relies on a past history of standard deviations on the same balance. If there are m standard deviations, s_1, ..., s_m, from historical data, a pooled standard deviation:

$$s_{\mathrm{P}} = \sqrt{\frac{1}{m}\sum s_i^2} \qquad (D.2\text{-}1)$$

is the best estimate of the balance standard deviation. The equation above assumes that the individual standard deviations have ν degrees of freedom, in which case the pooled standard deviation has $m \cdot \nu$ degrees of freedom. For each new design or series of measurements, the residual standard deviation, s_{new}, can be tested against the pooled value. The test statistic is:

$$F = \frac{s_{\mathrm{new}}^2}{s_{\mathrm{P}}^2} \qquad (D.2\text{-}2)$$

D.2.1 Normally, only the degradation in precision is tested. The precision of the balance is judged to be in control if:

F ≤ critical value from the F-distribution

with ν degrees of freedom for s_{new} and $m \cdot \nu$ degrees of freedom for s_{P}. Critical values of F for a one-sided test at the α = 0.05 significance level are listed in Table D.2. If the standard deviation is judged to have degraded, then the cause must be investigated and rectified.

Table D.1 Critical values of Student's t-distribution for a two-sided test with α = 0.05
Note : ν = degrees of freedom

ν	**Critical value**	ν	**Critical value**	ν	**Critical value**	ν	**Critical value**	ν	**Critical value**
1	12.706	**11**	2.201	**21**	2.080	**31**	2.040	**41**	2.020
2	4.303	**12**	2.179	**22**	2.074	**32**	2.037	**42**	2.018
3	3.182	**13**	2.160	**23**	2.069	**33**	2.035	**43**	2.017
4	2.776	**14**	2.145	**24**	2.064	**34**	2.032	**44**	2.015
5	2.571	**15**	2.131	**25**	2.060	**35**	2.030	**45**	2.014
6	2.447	**16**	2.120	**26**	2.056	**36**	2.028	**46**	2.013
7	2.365	**17**	2.110	**27**	2.052	**37**	2.026	**47**	2.012
8	2.306	**18**	2.101	**28**	2.048	**38**	2.024	**48**	2.011
9	2.262	**19**	2.093	**29**	2.045	**39**	2.023	**49**	2.010
10	2.228	**20**	2.086	**30**	2.042	**40**	2.021	**50**	2.009

Table D.2 Critical values of F distribution for a one-sided test that s_{new} (ν degrees of freedom) does not exceed s_p ($m \cdot \nu$, ν) at a significance level of α = 0.05

$F(\alpha, \nu, \nu \cdot m)$ $\alpha = 0.05$	ν									
m	**1**	**2**	**3**	**4**	**5**	**6**	**7**	**8**	**9**	**10**
1	161.448	19.000	9.277	6.388	5.050	4.284	3.787	3.438	3.179	2.978
2	18.513	6.944	4.757	3.838	3.326	2.996	2.764	2.591	2.456	2.348
3	10.128	5.143	3.863	3.259	2.901	2.661	2.488	2.355	2.250	2.165
4	7.709	4.459	3.490	3.007	2.711	2.508	2.359	2.244	2.153	2.077
5	6.608	4.103	3.287	2.866	2.603	2.421	2.285	2.180	2.096	2.026
6	5.987	3.885	3.160	2.776	2.534	2.364	2.237	2.138	2.059	1.993
7	5.591	3.739	3.072	2.714	2.485	2.324	2.203	2.109	2.032	1.969
8	5.318	3.634	3.009	2.668	2.449	2.295	2.178	2.087	2.013	1.951
9	5.117	3.555	2.960	2.634	2.422	2.272	2.159	2.070	1.998	1.938
10	4.965	3.493	2.922	2.606	2.400	2.254	2.143	2.056	1.986	1.927
11	4.844	3.443	2.892	2.584	2.383	2.239	2.131	2.045	1.976	1.918
12	4.747	3.403	2.866	2.565	2.368	2.227	2.121	2.036	1.968	1.910
13	4.667	3.369	2.845	2.550	2.356	2.217	2.112	2.029	1.961	1.904
14	4.600	3.340	2.827	2.537	2.346	2.209	2.104	2.022	1.955	1.899
15	4.543	3.316	2.812	2.525	2.337	2.201	2.098	2.016	1.950	1.894
16	4.494	3.295	2.798	2.515	2.329	2.195	2.092	2.011	1.945	1.890
17	4.451	3.276	2.786	2.507	2.322	2.189	2.087	2.007	1.942	1.887
18	4.414	3.259	2.776	2.499	2.316	2.184	2.083	2.003	1.938	1.884
19	4.381	3.245	2.766	2.492	2.310	2.179	2.079	2.000	1.935	1.881
20	4.351	3.232	2.758	2.486	2.305	2.175	2.076	1.997	1.932	1.878
30	4.171	3.150	2.706	2.447	2.274	2.149	2.053	1.977	1.915	1.862
40	4.085	3.111	2.680	2.428	2.259	2.136	2.042	1.967	1.906	1.854
50	4.034	3.087	2.665	2.417	2.250	2.129	2.036	1.962	1.901	1.850
60	4.001	3.072	2.655	2.409	2.244	2.124	2.031	1.958	1.897	1.846
70	3.978	3.061	2.648	2.404	2.240	2.120	2.028	1.955	1.895	1.844
80	3.960	3.053	2.642	2.400	2.237	2.117	2.026	1.953	1.893	1.843
90	3.947	3.046	2.638	2.397	2.234	2.115	2.024	1.951	1.891	1.841
100	3.936	3.041	2.635	2.394	2.232	2.114	2.023	1.950	1.890	1.840
∞	3.841	2.996	2.605	2.372	2.214	2.099	2.010	1.938	1.880	1.831

Annex E
CIPM formula and an approximation formula
(Informative)

E.1 The CIPM formula

In 1981, the Comité International des Poids et Mesures (CIPM) [39] recommended that the following equation be used to determine, ρ_a, the density of moist air:

$$\rho_a = \frac{pM_a}{ZRT}\left[1 - x_v\left(1 - \frac{M_v}{M_a}\right)\right] \qquad (E.1\text{-}1)$$

Where: p = pressure;
M_a = molar mass of dry air;
Z = compressibility;
R = molar gas constant;
T = thermodynamic temperature using ITS-90;
x_v = mole fraction of water vapor; and
M_v = molar mass of water.

This formula became known as the CIPM-81 equation. Since its publication in 1981, there have been several changes made to the recommended value of the constants used. The formula is now referred to as the "1981/91 equation for the determination of the density of moist air" or just the "1981/91 equation" after the 1991 Consultative Committee for Mass (CCM) meeting amended several of the constants used in the formula.

E.2 The constants

E.2.1 Molar mass of dry air, M_a

The molar mass of dry air, M_a, can be calculated, using x_{CO_2} as the mole fraction of carbon dioxide, as follows:

$$M_a = \left[28.9635 + 12.011\,(x_{CO_2} - 0.0004)\right] < 10^{-3}\ \text{kg mol}^{-1} \qquad (E.2.1\text{-}1)$$

Table E.1 Recommended value for M_a/R with x_{co_2} = 0.000 4

Constant	1991 recommended value	Units
M_a/R	3.483 49	10^{-3} kg KJ^{-1}

E.2.2 Mole fraction of water vapor, x_v

The mole fraction of water vapor, x_v, which is a function of the relative humidity, hr, or dew-point temperature, t_r, an enhancement factor, f, and the moist air saturation vapor pressure, p_{sv}, is given as follows:

$$x_v = (hr)f(p,t)\frac{p_{sv}(t)}{p} = f(p,t_r)\frac{p_{sv}(t_r)}{p} \qquad (E.2.2\text{-}1)$$

Where: hr = relative humidity expressed as a fraction;
p = pressure;
t = temperature in degrees Celsius;
$p_{sv}(t)$ = saturation vapour pressure of moist air; and
t_r = dew-point temperature.

E.2.2.1 The moist air saturation vapor pressure, p_{sv}, can be calculated as follows:

$$p_{sv} = 1\ \text{Pa} \quad \times \exp\left(AT^2 + BT + C + \frac{D}{T}\right) \qquad (E.2.2\text{-}2)$$

Where A, B, C, D are the vapor pressure constant parameters at saturation. The recommended values are as follows:

Table E.2 Recommended values for constants A, B, C, D

Constant	1991 recommended value	Units
A	1.237 884 7	10^{-5} K^{-2}
B	– 1.912 131 6	10^{-2} K^{-1}
C	33.937 110 47	
D	– 6.343 164 5	10^{3} K

E.2.2.2 Enhancement factor, *f*

The enhancement factor, f, is a function of three constants (α, β, γ) and the temperature, t, in degrees Celsius. This factor can be calculated as follows:

$$f = \alpha + \beta p + \gamma t^2 \qquad (E.2.2\text{-}3)$$

Table E.3 Recommended values for constants α, β, γ

Constant	1991 recommended value	Units
α	1.000 62	
β	3.14	10^{-8} Pa^{-1}
γ	5.6	10^{-7} K^{-2}

E.2.3 The compressibility factor, *Z*

The compressibility factor, Z, can be calculated using the following equation:

$$Z = 1 - \frac{p}{T}\left[a_0 + a_1 t + a_2 t^2 + (b_0 + b_1 t)x_v + (c_0 + c_1 t)x_v^2\right] + \frac{p^2}{T^2}\left(d + e x_v^2\right) \qquad (E.2.3\text{-}1)$$

Table E.4 Recommended values for constants a_0, a_1, a_2, b_0, b_1, c_0, c_1, d, e

Constant	1991 recommended value	Units
a_0	1.581 23	10^{-6} KPa^{-1}
a_1	– 2.933 1	10^{-8} Pa^{-1}
a_2	1.104 3	10^{-10} K^{-1}Pa^{-1}
b_0	5.707	10^{-6} KPa^{-1}
b_1	– 2.051	10^{-8} Pa^{-1}
c_0	1.989 8	10^{-4} KPa^{-1}
c_1	– 2.376	10^{-6} Pa^{-1}
d	1.83	10^{-11} K^{2}Pa^{-2}
e	– 0.765	10^{-8} K^{2}Pa^{-2}

E.3 Approximation formula for air density

The most accurate formula of air density is the CIPM formula (1981/91) [39].

An approximate formula may also be used:

$$\rho_a = \frac{0.348\,48\ p - 0.009\ (hr) \times \exp(0.061\,t)}{273.15 + t} \qquad (E.3\text{-}1)$$

Where: the density of air, ρ_a, is obtained in kg m^{-3};
the pressure, p, is given in mbar or hPa;
the relative humidity, hr, expressed as a percentage; and
the temperature, t, in °C.

Equation *(E.3-1)* has a relative uncertainty of 2×10^{-4} in the range 900 hPa < p < 1100 hPa, 10 °C < t < 30 °C and hr < 80 %.

For class E_1 weights, the density of air should always be determined based on corresponding measurements. However, the following approximation equation is a way to estimate the air density at laboratories that have no means of determining the air density at the site. The height above sea level is always known. Therefore, if the air density is not measured, it should be calculated as a mean value for the laboratory site as follows:

$$\rho_a = \rho_0 \times \exp\left(\frac{-\rho_0}{p_0} gh\right) \qquad (E.3\text{-}2)$$

Where: p_0 = 101 325 Pa;
ρ_0 = 1.2 kg m^{-3};
g = 9.81 ms^{-2}; and
h = height above sea level expressed in metres.

References

[1] *International vocabulary of basic and general terms in metrology (VIM)* (1993), ISO

[2] *International vocabulary of terms in legal metrology (VIML)* (2000), OIML

[3] OIML D 28 *Conventional value of the result of weighing in air* (2004) (D 28 was previously published as OIML R 33)

[4] ISO 4287:1997 Geometrical product specifications (GPS) - Surface texture: Profile method - Terms, definitions, and surface texture parameters

[5] ISO/IEC Guide 2:1996 Standardization and related activities - General vocabulary

[6] Davis, R. S., "Determining the magnetic properties of 1 kg mass standards" J. Res. National Institute of Standards and Technology (USA), 100, 209-25, May-June 1995; Errata, 109, 303, March-April 2004

[7] *Guide to the expression of uncertainty in measurement (GUM)*, first edition, 1993, corrected and reprinted 1995, ISO

[8] Myklebust T, Källgren H, Lau P, Nielsen L and Riski K, "Testing of weights: Part 3 - Magnetism and convection", *OIML Bulletin* XXXVIII (1997), pp. 5-10

[9] Gläser, M., "Magnetic interactions between weights and weighing instruments." Meas. Sci. Technol. 12 (2001), pp. 709-715

[10] ISO 261:1998 – ISO general-purpose metric screw threads – General plan

[11] Gläser, M., "Change of the apparent mass of weights arising from temperature differences," Metrologia 36 (1999), pp. 183–197

[12] Jean M. Bennett and Lars Mattsson, "Introduction to Surface Roughness and Scattering" Optical Society of America (1989)

[13] ISO 5436:1985, *Calibration specimens - Stylus instruments - Types, calibration and use of specimens*. (Ed. 1; 20 p; K)

[14] ISO 3274:1996 Geometrical Product Specifications (GPS) – Surface texture: Profile method – Nominal characteristics of contact (stylus) instruments (Ed. 2; 13 p; G). ISO 3274:1996/Cor 1:1998 (Ed. 1; 1 p; *)

[15] ISO 4288:1996 Geometrical Product Specifications (GPS) – Surface texture: Profile method – Rules and procedures for the assessment of surface texture (Ed. 2; 8 p; D). ISO 4288:1996/Cor 1:1998 (Ed. 1; 1 p; *)

[16] Myklebust, T., "Methods to determine magnetic properties of weights and magnetic field and field gradients of weights." National Measurement Service, Norway (1995)

[17] Myklebust, T. 1997 "Intercomparison: Measurement of the volume magnetic susceptibility and magnetisation of two cylindrical (kg) weights. EUROMET project 324", Justervesenet (NO)

[18] Myklebust, T. and Davis, R.S., "Comparison between JV and BIPM to determine the volume susceptibility of one 20 g weight and two 1 g weights", Justervesenet (1996)

[19] Myklebust, T. and Börjesson, L., "Comparison of two instruments based on the attracting method." National Measurement Service, Norway (1995)

[20] Ueki, M., Nezu, Y. and Ooiwa, A., "New facility for weight calibration service", Proceedings of the 14th IMEKO World Congress and Bulletin of NRLM vol. 46, No 4, pp. 223–228 (1997)

[21] Schoonover, R.M. and Davis, R.S., "Quick and Accurate Density Determination of Laboratory Weights". (Proceedings. 8th Conference. IMEKO Technical Committee TC3 on Measurement of Force and Mass, Krakow, Poland. September 9-10, 1980) (Paper in "Weighing Technology," pp. 1123–1127, (Druk, Zaklad Poligraficzny Wydawnictwa SIGMA, Warsaw, Poland (1980)

[22] Kobata, T., Ueki, M., Nezu, Y., Ooiwa, A. and Ishii, Y., "Characterization of an Acoustic Volumeter for Measuring the Volume of Weights", Proceedings of 15th IMEKO World Congress (1999)

[23] Ueki, M., Kobata, T., Mizushima, S., Nezu, Y., Ooiwa, A. and Ishii, Y., "Application of an Acoustic Volumeter to Standard Weights", Proceedings of 15th IMEKO World Congress (1999)

[24] Bettin, H., Spieweck, F., "Die Dichte des Wassers als FunktionerTemperaturnach infuhrung der Internationalen Temperaturskala von 1990", PTB-Mitt. 1003/90, pp. 195–196

[25] Tanaka, M., Girard, G., Davis, R., Peuto, A., Bignell, N., [NMIJ, BIPM, IMGC, NML], "Recommended table for the density of water between 0 °C and 40 °C based on recent experimental reports", Metrologia, 2001, 38, n°4, pp. 301–309

[26] Gorski, W., Toth, H.G., "Destilliertes Wasser als Dichtereferenzmaterial - Die elektrische Leitfähigkeit als Kriterium seiner Güte" - PTB-Mitt. 98 5/88, pp. 324–325

[27] Lau, P., "Weight Volume and Centre of Gravity", SP-AR to be published. (Secretariat is updating this reference (9/6/02))

[28] Croarkin, C., "An Extended Error Model for Comparison Calibration", Metrologia 26, 107 (1989)

[29] Schwartz, R. "Guide to mass determination with high accuracy" PTB-Bericht MA-40, Braunschweig, (1995). See also Kochsiek, M., Gläser, M., "Comprehensive Mass Metrology", Wiley, New York, Sec.3.4, "Mass determination with balances" (Roman Schwartz) (2000)

[30] Chapman, G.D., "Orthogonal designs for calibrating kilogram submultiples", NRCC25819. 27 April 1995, National Research Council Canada, Canada

[31] Morris, E.C., "Decade Design for Weighings of Non-uniform Variance", Metrologia 29, 373 (1992)

[32] Cameron, J.M., Croarkin, M.C., and Raybold, R. C.R., "Designs for the calibration of standards of mass", NBS TN 952 (1977)

[33] Gläser, M., "Cycles of comparison measurements, uncertainties and efficiencies", Meas. Sci. Technol 11 (2000), pp. 20–24

[34] Sutton, C.M. and Clarkson, M.T., "A general approach to comparisons in the presence of drift" Metrologia 30, 487 (1993/94)

[35] Expression of the Uncertainty of Measurement in Calibration, EA-4/02 (1999)

[36] Bich, W., Cox, M.G., and Harris, P.M., "Uncertainty modelling in mass comparisons", Metrologia 30, 495 (1993/4)

[37] Bich, W., "Covariances and restraints in mass metrology", Metrologia 27, 111 (1990)

[38] Gläser, M., "Covariances in the determination of conventional mass." Metrologia 37, 249–251 (2000)

[39] Davis, R.S., "Equation for the determination of the density of moist air" (1981/91), Metrologia 29, 67 (1992). Giacomo, P., "Equation for the determination of the density of moist air" (1981), Metrologia 18, 33 (1982)

[40] Chung, J.W., Ryu, K.S., Davis, R.S. "Uncertainty analysis of the BIPM susceptometer", Metrologia 38 (2001), pp. 535-541

Printed in France

GRANDE IMPRIMERIE DE TROYES